FINAL DRAWING

SPP Shipbuilding Co., Ltd.

Hull No. S5130

NOISE ADAPTIVE AUTOPILOT MODEL : PT500A-K-K2T (BNAAC)

GYROCOMPASS MODEL : CMZ900D

	・・			
	・・			
3	2014・10・15	Revised page 10,20,24.	T.W	Y.O
2	2014・04・22	Revised page 20,21.	T.W	Y.O
1	2013・11・19	Revised Comment.	T.W	Y.O

DRAWN BY	T.Wakamatsu	Yokogawa Denshikiki Co., Ltd.	DATE	DEC. 17. 2013
CHECKED BY	Y.Takahashi		ORDER NO.	R3D2032 1/4
APPROVED	Y.Oosaka			
GR9435				(YPNDS19)

K2T

ITEM	DESCRIPTION	DRAWING NO.	REMARKS
01	SPECIFICATIONS	R3D2032-01	Autopilot
02	RUDDER FEEDBACK FAILURE SCENARIO	8G800D021-54	
03	SPECIFICATIONS	R3D2032-02	Gyrocompass
04	SIGNAL FORMAT GENERATION	R3D2032-04	
05	INSTALLATION NOTES	8G820Z022-46	Autopilot
06	DO.	8G800D021-61	Gyrocompass
07			
08	BLOCK DIAGRAM FOR GYRO & PILOT	R3D2032-06A	
09	OVERALL SYSTEM DIAGRAM	R3D2032-05	Autopilot
10	OVERALL SYSTEM DIAGRAM	R3D2032-06	Gyrocompass
11	MAGNETIC COMPASS BACK-UP SYSTEM	R3D2032-07	
12			

ジャイロ内蔵
E/J : -31
E : -32
単体
J : -45
E : -46

A : -01
D : -03

SCOPE OF SUPPLY

ITEM	EQUIPMENT	QTY	DRAWING NO.	MASS (kg)	REMARKS
13-01	CONTROL STAND (PM208)	1	8G820A105-26	116.0	With cover
13-02	MASTER COPASS (MKM026) (NO.1)	(1)	DO.	—	Built-in Control stand For Gyrocompass
13-03	CONTROL UNIT (MKC327)	(1)	DO.	—	DO. For Gyrocompass
13-04	C. OPERATION UNIT (MKR040)	(1)	DO.	—	DO. For Gyrocompass
13-05	SERIAL DISTRIBUTOR (MHB306)	(1)	Do.	—	DO. For Gyrocompass
13-06	INTERCONNECT UNIT (MPN031)	(1)	Do.	—	DO. For Magnetic compass
13-07	UPPER PANEL	(1)	R3D2032-10	—	Included in control stand
13-08	AUTO STEERING UNIT (PB343)	(1)	DO.	—	
13-09	ANNUNCIATOR UNIT (PH614)	(1)	DO.	—	
13-10	HAND STEERING UNIT (PB335)	(1)	DO.	—	
13-11	SWITCH UNIT (PH718/Z) (SYS/NFU)	(1)	DO.	—	
13-12	SWITCH UNIT (PH720/Z) (MODE)	(1)	DO.	—	
13-13	STEERING REPEATER COMPASS (MKR056)	(1)	DO.	—	
13-14	TMC DISPLAY UNIT (MPC430)	(1)	DO.	—	
13-15	DIMMER UNIT (MGS507)	(1)	DO.	—	
13-16	INDEPENDENT OFF COURSE ALARM UNIT (MZY750)	(1)	DO.	—	

PC134
ｺｰﾐﾝｸﾞ : -03
ｸﾞﾗﾝﾄﾞ : -13

PT120 直 平
310 : -11 -14
400 : -12 -15
500 : -13 -16

△	--		DR.	SECT.
△	--		CH.	
△	--		APP.	
△	--			

DRAWING & EQUIPMENT LIST

NO. R3D2032

PAGE 2/4

YOKOGAWA
Yokogawa Denshikiki Co.,Ltd.

K2T

ITEM	EQUIPMENT	QTY	DRAWING NO.	MASS (kg)	REMARKS
13-17	CONTROL & POWER BOX (PC134)	2	8G800Y228-13	40.0	For Autopilot
13-18	μ TRANSMITTER (PT123/FFD)	2	8G800Y255-28	11.0	
13-19					
13-20					
13-21	MASTER COMPASS (MKM026) (NO.2)	1	8G800Y118-81	42.0	
13-22	DUAL AC ADAPTER (MKS071)	1	8G800Y102-29	20.0	
13-23	UNIVERSAL DATA DISPLAY (MHR110A)	1	8G800Y207-12	0.6	Heading indicate
13-24	ANALOG INDICATOR (MHR130)	1	8G800Y153-01	4.0	Rate of turn indicate
13-25	DIMMER UNIT (MRD011)	1	8G800Y303-10	0.3	For Analog indicator
13-26					
13-27					
13-28	COURSE RECORDER (MKR101A)	1	8G800Y205-10	6.0	
13-29					
13-30					
13-31	HORIZONTAL STAND (KX223A)	2	8G800Y112-15	21.5	Both wings
13-32	HORIZONTAL BRACKET (KX201A)	1	8G800Y113-14	6.5	W/H
13-33	TILTING BRACKET (KX213)	1	8G800Y114-12	4.5	S/G ROOM
13-34	REPEATER COMPASS (MKR050)	4	8G800Y110-26	4.8	Gland type
13-35	CONNECTION BOX (MKN019)	4	DO.	1.9	DO.
13-36					
13-37					
13-38					
13-39					
13-40					
13-41					
13-42					
13-43					
13-44					
13-45					

MKR101A
-F :-10 6.0 kg
-W :-11 11.0 kg
MKR181A
-F :-12 12.0 kg
-W :-16 22.0 kg

MKR302
-F :-15 ﾃﾞｨﾏｳﾄ 6.0 kg
-W : -12 ﾃﾞｨﾏｳﾄ 4.0 kg
-W : -13 ﾃﾞｨﾏ内 4.8 kg
-W : -14 ﾃﾞｨﾏｳﾄ 5.0 kg

MKD002
FOR MKR302
-F : -21 0.5 kg
-N : -20 0.1 kg
FOR MHR110A
-F : -23 0.5 kg
-N : -22 0.1 kg

MKN019
Gland : 15f -25
20f -26
25f -27
Plug : 15f -28
20f -29
25f -30

	--		DR.	SECT.	DRAWING & EQUIPMENT LIST
	--		CH.		
	--		APP.		NO. R3D2032 PAGE 3/4
1	2013-11-19	T.W			

YOKOGAWA
Yokogawa Denshikiki Co.,Ltd.

K2T

ITEM	EQUIPMENT	QTY	DRAWING NO.	MASS (kg)	REMARKS
13-46					
13-47					
13-48					
13-49					
13-50					
13-51					
13-52					
13-53					
13-54					
13-55					
13-56					
13-57					
13-58					
13-59	FITTING KIT, GYRO SPHERE (MKZ115)	2s	8G800Y150-17	3.3	
13-60					
13-61	AZIMUTH CIRCLE (MKX617)	1	8G800Y115-09	2.0	
13-62	SHADING CIRCLE (KX605)	1	8G800Y122-02	0.3	
13-63	REPEATER COVER (KX607)	4	8G800Y121-02	0.5	
13-64	SPARE PARTS BOX	1	8G800Y298-17	6.6	

ﾌﾟﾗ大-17 :5.4kg
ｽﾁｰﾙｰ07: 7.0kg

ﾌﾟﾗ大-17 :5.4kg
ｽﾁｰﾙｰ07: 7.0kg

K2T
440V : -05
220V : -06
K3T
440V : -07
220V : -08
K4T
440V : -09
220V : -10

KZ512
0B: -27
0B: -28(MKR027)
0S: -29(BUなし)
0S: -30(BUあり)
0D: -31(BUなし)
0D: -32(BUあり)

MKR101
STD : -43
/TW : -44
MKR181A
±40°
STD : -45
/TH : -46
±45° : -47
/TH : -48

ITEM	EQUIPMENT	DRAWING NO.	REMARKS
14	SPARE PARTS LIST	8G820Z723-45	Autopilot
15	DO.	R3D2032-20	DO.
16	DO.	8G803N701-32	Gyrocompass
17	DO.	8G800D711-43	Course recorder
18			
19			
20			
21			

△	--		DR.	SECT.	DRAWING & EQUIPMENT LIST
△	--		CH.		
△	--				NO. R3D2032
△	--		APP.		PAGE 4/4

YOKOGAWA
Yokogawa Denshikiki Co.,Ltd.

No.	仕 様 ／ Specifications		
1	適用規格 Applicable regulation	IMO REGULATION	: IMO resolution MSC. 64(67) ANNEX 3
2	主電源 Main power supply	電源 Power supply	: 440V AC ±10%, 60Hz ±5%, 1φ
		消費電力 Power consumption	: 700VA (Max.)
3	警報電源 Alarm power supply	電源 Power supply	: 24V DC (許容範囲/Variation : 20V DC to 30V DC)
		消費電力 Power consumption	: 0.5A (常時/In normal)
4	環境仕様(通常使用条件) Operating temperature range	周囲温度 Ambient temperature	: ｺﾝﾄﾛｰﾙｽﾀﾝﾄﾞ Control stand ・・・・・・・・・・・・ -15℃ to +55℃
			: 舵機室装備品 Equipment installed in the steering gear room ・・・・・・ -15℃ to +60℃
5	塗装色 Painted color	7.5BG7/2 Control & power box ・・・・・・・・PC134 μ Transmitter ・・・・・・・・・・・・・・PT123	
		ただし、ｺﾝﾄﾛｰﾙｽﾀﾝﾄﾞはﾂｰﾄﾝｶﾗｰ Except control stand which color is twin color. ﾎﾞﾃﾞｨｰ/Body: 7.5BG7/2 上部ﾊﾟﾈﾙ/Upper panel: 0.8Y2.5/0.4 (Lamp black)	
6	銘板および注意銘板 Name plate & caution plate	和英併記 Japanese and English 英中併記 English and Chinese ➡ 英文 English	
7	舵取機制御方式 Control method of steering gear	K2T	川重電気式ﾎﾟﾝﾌﾟ制御形舵取機 (2系統) KAWASAKI (KHI) electrical pump control typesteering gear. 2 Hydraulic pumps control.
	ﾊﾟﾜｰﾕﾆｯﾄ Power unit	制御対象 Control apparatus	直流ﾄﾙｸﾓｰﾀ(舵取機油圧ﾎﾟﾝﾌﾟに装備) DC Torque motor in the steering gear
		制御信号 Control signal	0A DC to 3.2A DC

DR. T.Wakamatsu	2013-05-15	オートパイロット仕様書 AUTOPILOT SPECIFICATION	
CH. Y.Takahashi	2013-05-15	NO. R3D2032-01	PAGE 1/3
APP. Y.Oosaka	2013-05-15		

SIZE A4

YOKOGAWA ◆
Yokogawa Denshikiki Co.,Ltd.

No.	仕 様 ／ Specifications	
8	制御出力信号 Control output signal	電流信号 Current signal ： (±1mA/±1°, ー：取舵/Port, ＋：面舵/Starboard)
9	ｱﾝﾛｰﾄﾞﾊﾞﾙﾌﾞ励磁信号 Unload valve control signal	100V AC
10	操舵角度 Steering angle	± 35° ± 45° ± 35°/±70°
11	操舵ﾓｰﾄﾞ Steering mode	
12	接続ｼﾞｬｲﾛｺﾝﾊﾟｽ、ﾏｽﾀｺﾝﾊﾟｽの形式 Type of combined master compass	CMZ700形ﾏｽﾀｺﾝﾊﾟｽ内蔵 The Master compass is built-in control stand. CMZ700形ﾏｽﾀｺﾝﾊﾟｽ外部設置形 The Mater compass is installed outside of the control stand. CMZ900形ﾏｽﾀｺﾝﾊﾟｽ内蔵 The Master compass is built-in control stand. CMZ900形ﾏｽﾀｺﾝﾊﾟｽ外部設置形 The Mater compass is installed outside of the control stand.
13	船速入力信号 Ship's speed input signal	200 Pulse/n mile signal PT500A： 必要/Use PT500D： 不要/Not use Serial signal (VBW) PT500A： 必要/Use PT500D： 不要/Not use

CODE	ｺｰﾄﾞ	外部信号 NAVI	自動 AUTO	手動 HAND	遠隔 REMOTE	ﾉﾝﾌｫﾛｰｱｯﾌﾟ NFU
S		—	○	○	—	○
1		—	○	○	○	○
2		○	○	○	—	○
3		○	○	○	○	○
Z						

DR.		ｵｰﾄﾊﾟｲﾛｯﾄ仕様書 AUTOPILOT SPECIFICATION			
CH.					
APP.		NO. R3D2032-01		PAGE 2/3	

SIZE A4

YOKOGAWA ◆
Yokogawa Denshikiki Co.,Ltd.

ECDIS

VDR

No.	仕 様 ／ Specifications		
14	外部方位入力信号 External heading input signal	シリアル信号 : NMEA0183基準 Serial signal : NMEA0183	
		なし / Not use ➡ あり / Use	
15	外部設定コース入力信号 External setting course input signal	シリアル信号 : NMEA0183基準 (APB, RMB, HSC, HTCから選択可能) Serial signal : NMEA0183 (APB, RMB, HSC, HTC ect, selectable)	
		なし / Not use ➡ あり / Use	トラックコントロール用 For Track control
16	操舵モード/命令舵角/応答舵角出力信号 Steering mode/rudder command/rudder response output signal	シリアル信号 : NMEA0183基準 (操舵モード/命令舵角:HTD/応答舵角:RSA) Serial signal : NMEA0183 (Steering mode/Rudder command : HTD/ Rudder response : RSA)	
		なし / Not use ➡ あり / Use	VDR,命令/実舵角指示用およびトラックコントロール用 For VDR, Rudder order/Rudder Angle indicator and Track control
17	警報電源AC バックアップ AC back-up for alarm NK MO-A/B 船級要求規則 (Ship's classification)	➡ なし / Without Back-up あり / With Back-up	
18	舵角アナログ信号 Rudder angle analog signal	出力レベル Voltage level	0V DC から5V DC (負荷抵抗: 5kΩ以上) 0V DC to 5V DC (LOAD ≧ 5KΩ)
		出力リップル Ripple voltage	50mV Vp-p
		出力変換精度 Accuracy	± 0.5% F.S.
	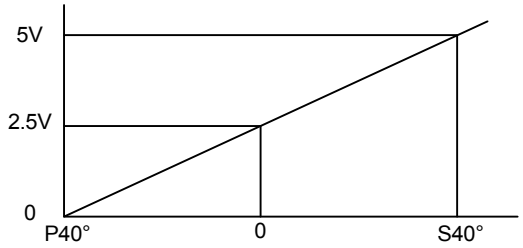		

DR.	オートパイロット仕様書 AUTOPILOT SPECIFICATION		
CH.	NO. R3D2032-01	PAGE 3/3	
APP.			

SIZE A4

YOKOGAWA ◆
Yokogawa Denshikiki Co.,Ltd.

1. Rudder feedback failure scenario

The following requirements have been issued from Class DNV at Dec. 2002.

-Failure in the rudder feed back loop shall be detected and immediately alarmed.

-The rudder control shall fail to safety, which normally means freeze position.

-Operational procedure shall describe the correct course of action.

2. Solution of the requirements

2.1 SERVO LOOP FAILURE

This alarm is issued if the difference between the rudder order and the rudder feedback angle is approx.5 degree or more and, the follow up time does not finish within the following time. The monitor setting of Servo loop failure can be carried out using the maintenance menu, and setting the minimum & maximum commanded angle and the minimum & maximum delay time can be adjusted as shown in the following table.

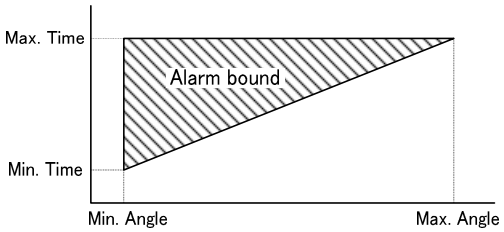

SETTING VALUE FOR SERVO LOOP FAILURE

ITEM	STATE OF S/G PUMP OPERATION		Setting range
	SINGLE	PARALLEL	
Min. Angle	5 degrees		2° ～5°
Max. Angle	Maximum rudder angle×2		70° ～160°
Min. Time	7 s	6 s	3s～12s
Max. Time	30 s	22 s	15s～160s
	In case that Max. angle is 70 degrees.		

2.2 FEEDBACK SIGNAL FAILURE

This alarm is issued if the difference between the feedback and the standard signals.

To monitor this alarm, the standard signal is provided from the independent potentiometer which is mechanically linked with the feedback potentiometer.

SETTING VALUE FOR FEEDBACK SIGNAL FAILURE

Steering range	Setting angle		Delay time
	Initial setting	Setting range	
Normal (less than 45°)	3 degrees	2.4° ～5.2°	Less than 1.5s
Wide (more than 50°)	6 degrees	5.2° ～10.4°	

2.3 Working of Autopilot at the servo-loop failure and the feedback signal failure

The relay turned on when Servo loop failure or/and Feedback signal failure is generated with AUTO STEERING UNIT.

And, as the operation mode of No.1/No.2 Control & Power Box, the follow-up mode is compulsorily released by the relay's status. Then the rudder is kept in present position.

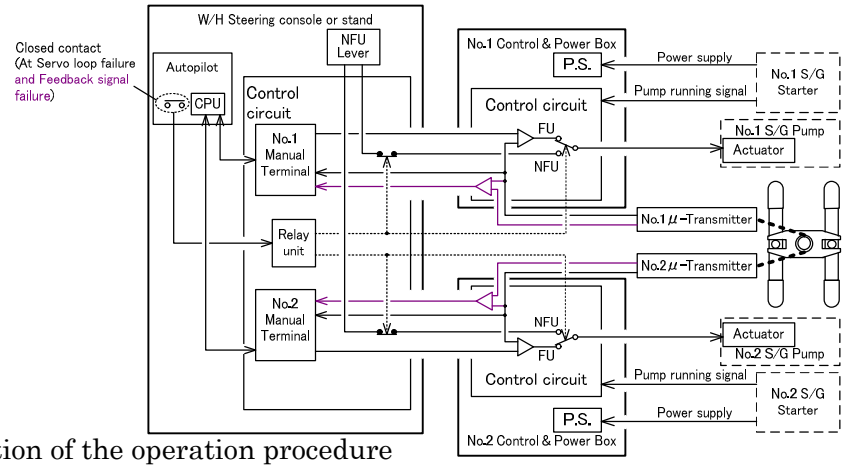

2.4 Description of the operation procedure

The following sentence is mentioned in the steering block diagram placed in the steering stand.

Switch over "SYSTEM SWITCH" to the NFU mode at once when FB FAIL or SERVO LOOP FAILURE was generated.
In single SG pump operation, stop the pump used now and start the standby side when you want to continue the follow-up steering.
In parallel SG pumps operation, stop either pump, and confirm the steering operation.

	- -		DR. K. Watanabe	2004-06-07	Rudder feedback failure scenario (for PT500)
	- -		CH. I. Yamamoto	2004-06-07	
6	12-09-24	M. S	APP. I. Yamamoto	2004-06-07	NO. 8G800D021-54 PAGE 1/1
5	12-06-07	Y. O			
MICRO					

SIZE A4

YOKOGAWA
Yokogawa Denshikiki Co. Ltd

Form Y-12 -3

No.	仕 様 ／ Specifications			
1	適用規格 Applicable regulation	IMO resolution A.424 (XI)		
2	主電源 Main power supply	220V AC ±10%, 50/60Hz, 1φ		
3	消費電力 Power consumption	起動時 Starting	250VA ＋ 12VA × レピータコンパス数（最大8回路） 250VA ＋ 12VA × Number of repeater compass （Max. 8 circuits）	
		定常時 Operating	200VA ＋ 12VA × レピータコンパス数（最大8回路） 200VA ＋ 12VA × Number of repeater compass （Max. 8 circuits）	
4	警報電源 Alarm power supply	24V DC (20V DC から 30V DC), 0.1A 24V DC (Variation 20V DC to 30V DC), 0.1A		
5	バッテリバックアップ Battery back-up	24V DC 船内バッテリ 24V DC Ship's battery	→ あり/Use なし/Not use	
		起動時 Starting	約10A ＋ 0.35A × レピータコンパス数（最大8回路） Approx. 10A ＋ 0.35A × Number of repeater compass （Max. 8 circuits）	
		定常時 Operating	約7A ＋ 0.35A × レピータコンパス数（最大8回路） Approx. 7A ＋ 0.35A × Number of repeater compass （Max. 8 circuits）	
6	環境仕様 （通常使用条件） Environmental （In running）	周囲温度 Ambient Temperature	マスタコンパス以外の防護型の機器 Protected equipments except Master compass	-15℃ から +55℃ -15℃ to +55℃
			マスタコンパス Master compass	-10℃ から +50℃ -10℃ to +50℃
			方位測定用レピータコンパス Bering repeater compass	-25℃ から +55℃ -25℃ to +55℃
		許容動揺角 Mechanical freedoms	ロール角 Maximum permissible roll angle	±40°
			ピッチ角 Maximum permissible pitch angle	±40°
		電磁両立性 EMC	IEC60945 4th 合格 Acc. to IEC60945 4th edition	
7	塗装色（マンセルNo.） Painted color (Munsell No.)	0.8Y2.5/0.4（Lamp black） Master compass ・・・・・・・・・・・MKM026 Universal data display・・・・MHR110A Analog indicator ・・・・・・・・・・MHR130 Dimmer unit ・・・・・・・・・・・・・MRD011	7.5BG7/2 Dual ac adapter ・・・・・・・・・・・MKS071 Horizontal stand・・・・・・・・・・・・KX223A Horizontal bracket ・・・・・・・・・・KX201A Tilting bracket bracket ・・・・・・・KX213 Repeater compass・・・・・・・・・・MKR050 Connection box ・・・・・・・・・・・・MKN019	

DR.	T.Wakamatsu	2013-05-15	ジャイロコンパス仕様書 GYROCOMPASS SPECIFICATION
CH.	Y.Takahashi	2013-05-15	NO. R3D2032-02
APP.	Y.Oosaka	2013-05-15	PAGE 1/5

SIZE A4

YOKOGAWA ◆
Yokogawa Denshikiki Co.,Ltd.

No.	仕 様 ／ Specifications	
8	銘板および注意銘板 Name plate and caution plate	和英併記 Japanese and English 英文 English 英中併記 English and Chinese
9	指度静定時間 Setting time	5時間以内（約2時間で実用状態になります） With in 5 hours (Normal setting time : about 2 hours)
10	指北精度 Accuracy	±0.25°×sec Lat.（静止状態 / Static） ±0.7° ×sec Lat.（動的状態 / Dynamic）
11	追従精度 Follow up accuracy	0.1°以下 0.1°or less
12	最大追従速度 Maximum follow-up speed	30°/s
13	入力信号 Input signal	
13-1	速度誤差修正用船速信号：接点またはフォトカプラ型パルス信号（200 Pulse/nm） Ship's speed signal : Contact type or Photo-coupler type signal (200 Pulse/nm)	: 1 回路 : 1 circuit あり/Use なし/Not use
13-2	受信回路：フォトカプラ Receiving circuit : Photo coupler	: データはジェネレーション可能 Serial signal can be generated together with the output
	速度誤差修正用船速信号 IEC61162-1 (NMEA0183) Ship's speed signal IEC61162-1 (NMEA0183) VSD, VTG, VHW, VBW	: 1 回路 : 1 circuit あり/Use なし/Not use
	速度誤差修正用緯度信号 IEC61162-1 (NMEA0183) Latitude signal IEC61162-1 (NMEA0183) GGA, GLL	: 1 回路 : 1 circuit あり/Use なし/Not use
	偏差警報用外部方位信号 IEC61162-1 (NMEA0183) External heading signal for deviation alarm (For Heading monitor) (NMEA0183) HDM, HDG, THS, HDT	: 1 回路 : 1 circuit あり/Use なし/Not use
13-3	ブザーストップ用接点信号（ブザーストップで接の接点信号） Buzzer stop signal (Contact close signal at buzzer stop condition)	: 1 回路 : 1 circuit
	接点信号 Contact capacity	24V DC Max. 0.5A

1	14-02-26	S.I	DR.	ジャイロコンパス仕様書 GYROCOMPASS SPECIFICATION	
			CH.	NO. R3D2032-02	PAGE 2/5
			APP.		

SIZE A4

No.	仕 様 ／ Specifications			
14	出力信号 Output signal			
	14-1	ステッパ方位信号 Stepper output	:4 回路(最大1.0A)または9回路(最大1.0A) :4 circuits (Max. 1.0A) or 9 circuits (Max. 1.0A)	
		信号出力形態 Output signal format	24V DC 1/6°3 bit グレイコード / gray code 35V DC 1/6°3 bit グレイコード / gray code	
		接続機器 Connection equipment	RADAR ····· 2 ····· 0 ····· 0 ····· 0	
	14-2	レピータコンパス信号(シリアルYDKフォーマット) Repeater compass signal (Serial YDK format)	:8 回路 :8 circuits	
		接続機器 Connection equipment	Steering repeater compass ····· 1 Repeater compass ····· 4	
		通信速度 Transmission speed	:4800bps/9600bps	
	14-3	シリアル信号 Serial signal	信号形態:IEC61162-1(1回路)/61162-2(2回路) (NMEA0183) Signal form :IEC61162-1(1circuit)/61162-2(2 circuits) (NMEA0183) シリアル信号:コントロールボックスから出力 Serial signal output from control box	:13 回路 :13 circuits
		データフォーマットはジェネレーション可能 Serial signal can be generated together with be output		
		センテンス Sentence	HDT, ROT, THS, CMZ300X フォーマット(YDKオリジナル) HDT, ROT, THS, CMZ300X format (YDK original)	
		接続機器 Connection equipment	Autopilot ····· 1 Universal data display ····· 1 Assist monitor ····· 0 V.D.R. ····· 1 A.I.S. ····· 1 VSAT ····· 1 RADAR ····· 0 ECDIS ····· 2 SPEED LOG ····· 1 DGPS ····· 0 Satcom-FB ····· 0	

MHB306
:13回路

2	14-10-15	T.W	DR.	ジャイロコンパス仕様書 GYROCOMPASS SPECIFICATION	
1	13-11-05	T.W	CH.	NO. R3D2032-02	PAGE 3/5
			APP.		

SIZE A4

YOKOGAWA
Yokogawa Denshikiki Co.,Ltd.

No.	仕 様 ／ Specifications			
14	14-4	アナログ方位・象限信号(0V DC から 5V DC)コントロールボックスから出力 Analog heading・Quadrant signal (0V DC to 5V DC) output from control box		: 1 回路 : 1 circuit
		接続機器 Connection equipment	Dual channel recorder ・・・・・・・・・・ 0 Course recorder ・・・・・・・・・・・・・・ 1	
		信号仕様 Signal specification	出力レベル Voltage level	0V DC から 5V DC (負荷抵抗:500kΩ以上) 0V DC to 5V DC (load ≧ 500kΩ)
			出力リップル Ripple level	50mV Vp-p
			出力変換精度 Accuracy	±1% / F.S
		(1)方位信号 (1)Heading	(2)象限信号 (2)Quadrant	
	14-5	アナログ回頭角速度信号(0V DC から 5V DC)コントロールボックスから出力 Analog turn rate signal (0V DC to 5V DC) output from control box		: 3 回路 : 3 circuit
		出力レンジ Output range (°/min)		
		接続機器 Connection equipment	Analog Indicator ・・・・・・・・・・・・・・・・・・ 1 ・・・・・・・・・・・・・・・・・・ 0 ・・・・・・・・・・・・・・・・・・ 0	
		適用規格 Applicable regulation	IMO resolution A.526 (XIII)	
		精度 Accuracy	±0.5°/min	
		入出力表 I/O table		
		ディマ定格 Rating of dimmer	100Ω 5W 以上 More than 5W	

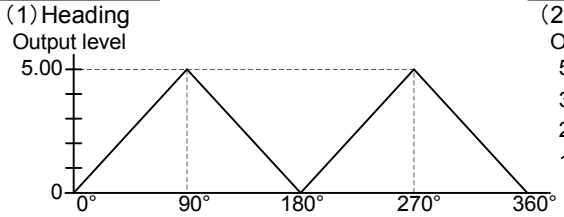

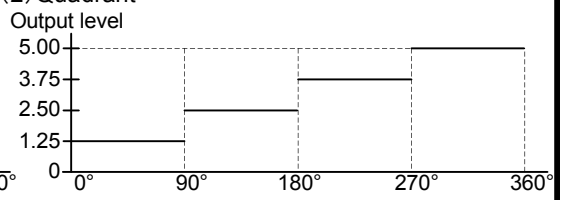

ポート PORT	出力レンジ／Output range			
	30°/min	100°/min	120°/min	300°/min
#1	○	—	—	—
#2	○	—	—	—
#3	○	—	—	—

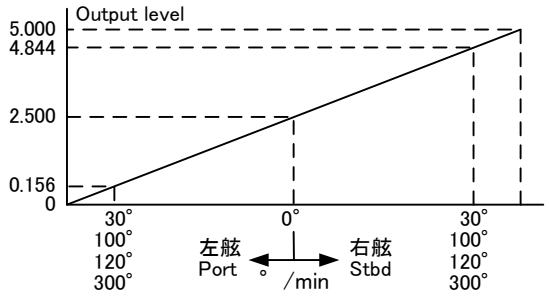

DR.	ジャイロコンパス仕様書 GYROCOMPASS SPECIFICATION		
CH.	NO. R3D2032-02	PAGE 4/5	
APP.			

SIZE A4

YOKOGAWA ◆
Yokogawa Denshikiki Co.,Ltd.

No.	仕 様 ／ Specifications			
15	選択方位出力(接点信号:選択された方位に対応する接点を接にする) Heading selection contact output (Closed and held : which represents the heading sensor to transmit)			: 1 回路 : 1 circuit
	接点容量 Contact capacity	24V DC Max. 0.5A		
16	運転信号(運転で接の接点信号) Running signal (Closed and held at the running)			: No.1,No.2 各1回路 : No.1,No.2 Each 1 circuit
	接点容量 Contact capacity	24V DC Max. 0.5A		
17	システム異常信号(異常で開の接点信号) ﾏｽﾀｺﾝﾊﾟｽ＋ｺﾝﾄﾛｰﾙﾎﾞｯｸｽ System fail signal (Opened and held during malfunction occurs in Master compass or Control box)			: 1 回路 : 1 circuit
	接点容量 Contact capacity	24V DC Max. 0.5A		
18	電源無電圧信号(異常で開の接点信号) No-voltage signal (Opened and held during the power supply interruption)			: No.1,No.2 各1回路 : No.1,No.2 Each 1 circuit
	接点容量 Contact capacity	24V DC Max. 0.5A		
19	マスタコンパス異常信号(異常で開の接点信号) Master compass fail signal (Opened and held during malfunction occurs in Master compass)			: No.1,No.2 各1回路 : No.1,No.2 Each 1 circuit
	接点容量 Contact capacity	24V DC Max. 0.5A		
20	方位偏差警報信号(方位偏差の設定値以上を検出で開の接点信号) Heading deviation alarm signal (Opened and held at the excess of heading deviation)			: 1 回路 : 1 circuit
	接点容量 Contact capacity	24V DC Max. 0.5A		
21	ブザーストップ接点出力 Buzzer stop acknowledge (Momentary closed (1s) when Buzzer stop is commanded)			: 1 回路 : 1 circuit
	接点容量 Contact capacity	24V DC Max. 0.5A		
22	付属機器用電源出力 Power supply for accessories			
	AC電源出力 AC power output	出力電圧 Output voltage	電圧は主電源電圧と同一 Output voltage as basis on Main power supply	: 4 回路 : 4 circuit
		出力容量 Output capacity	Max. 2A	
	DC電源出力 DC power output	出力電圧 Output voltage	24V DC	: 2 回路 : 2 circuit
		出力容量 Output capacity	Max. 2A	

DR.	ジャイロコンパス仕様書 GYROCOMPASS SPECIFICATION		
CH.	NO.	R3D2032-02	PAGE 5/5
APP.			

SIZE A4

YOKOGAWA ◆
Yokogawa Denshikiki Co.,Ltd.

ハードウエア（入力）

Hardware parameters (Input)

ポート Port	通信速度 Transmission speed	データビット Data bit length	パリティビット Parity bit	ストップビット Stop bit length
☐ #1	4800 ボー/Baud	8 ビット/Bit	無し/Non	1 ビット/Bit
☑ #2	4800 ボー/Baud	8 ビット/Bit	無し/Non	1 ビット/Bit
☑ #3	4800 ボー/Baud	8 ビット/Bit	無し/Non	1 ビット/Bit

ソフトウエア（入力）

Software parameters (Input)

【Input】

TB52		←標準設定	←選択項目
4	RD1A	[SPD]	× 無し
5	RD1B		
6	RD2A	[POS]	[POS]$**GGA (STD)
7	RD2B		
8	RD3A	[HDG]	[HDG]MPC430(YDK)
9	RD3B		

ポート Port	種別 Kind	Already /New	センテンス Sentence	ROT設定 $**ROT	開始位置 Str Pos	チェックサム Ck Sum	SPD単位 SPD Unit
☐ #1	–	–	–		–	–	–
	–	–	–		–	–	
	–	–	–	–	–	–	
☑ #2	–	–	–		–	–	–
	位置/POS	Already	$**GGA		–	–	
	–	–	–	–	–	–	
☑ #3	–	–	–		–	–	–
	–	–	–		–	–	
	方位/HDG	Already	$**HDG	NONE	–	–	

	– –	DR. T.Wakamatsu	DATE 2013-05-15	CMZ900D/S/B(with C.OPE) ｼﾞｪﾈﾚｰｼｮﾝ内容 （入力）	
	– –	CH. Y.Takahashi		SIGNAL FORMAT GENERATION FOR CMZ900(with C.OPE) (Input)	
	– –	APP. Y.Oosaka	2013-05-15	NO. R3D2032-04	PAGE 1 OF 2
	– –				
MICRO	– –				

FORMAT REV. GG9DSB_0.0

SIZE A4

Form Y-12-3

YOKOGAWA

Yokogawa Denshikiki Co.,Ltd

【Type】

CMZ900D

ハードウエア (出力)

Hardware parameters (Output)

ポート Port	通信速度 Transmission speed	データビット Data bit length	パリティビット Parity bit	ストップビット Stop bit length
☑ #1	4800 ボー/Baud	8 ビット/Bit	無し/Non	2 ビット/Bit
☑ #2	4800 ボー/Baud	8 ビット/Bit	無し/Non	1 ビット/Bit
☑ #3	38400 ボー/Baud	8 ビット/Bit	無し/Non	1 ビット/Bit
☑ #4	4800 ボー/Baud	8 ビット/Bit	無し/Non	1 ビット/Bit

【Output】

←CMZ700B+MKR040
←CMZ700S-S1以外
←CMZ700S-S1
←CMZ700D

MKM026-TB1	MKC326-TB2 / MKC327-TB64		←標準設定	←選択項目
11	1	SD1A	CMZ300X	CMZ300X
12	2	SD1B	CMZ300X	CMZ300X
13	3	SG	CMZ300X	CMZ300X
14	4	SD2A	CMZ300X	H/R (61162-1)
15	5	SD2B	CMZ300X	H/R (61162-1)
16	6	SG	CMZ300X	H/R (61162-1)
17	7	SD3A	H/R (61162-1)	H/R (61162-2)
18	8	SD3B	H/R (61162-1)	H/R (61162-2)
19	9	SG	H/R (61162-1)	H/R (61162-2)
TB52	1	SDEA	HEHDT	HEHDT
	2	SDEB	HEHDT	HEHDT
	3	SG	HEHDT	HEHDT

ソフトウエア (出力)

Software parameters (Output)

ポート Port	レコード Record	GYRO /EXT	種別 Kind	Already /New	センテンス Sentence	周期 Interval	データ数 Dat Num	方位位置 HDG Pos	ROT位置 ROT Pos	チェクサム Ck Sum	方位データ HDG Type	ROT単位 ROT Unit	データ識別 A/V Sta
☑ #1	1	GYRO	HDG/ROT	Already	$HEHRC	200 ms	–	–	–	–	–	–	–
		EXT	HDG/ROT	Already	$HCHRC	200 ms	–	–	–	–	–	–	–
	2	GYRO	NONE	–	–	–	–	–	–	–	–	–	–
		EXT	NONE	–	–	–	–	–	–	–	–	–	–
	3	GYRO	NONE	–	–	–	–	–	–	–	–	–	–
		EXT	NONE	–	–	–	–	–	–	–	–	–	–
☑ #2	1	GYRO	HDG	Already	$**HDT	200 ms	–	–	–	–	–	–	–
		EXT	HDG	Already	$**HDG	200 ms	–	–	–	–	–	–	–
	2	GYRO	ROT	Already	$**ROT	200 ms	–	–	–	–	–	–	–
		EXT	ROT	Already	$**ROT	200 ms	–	–	–	–	–	–	–
	3	GYRO	NONE	–	–	–	–	–	–	–	–	–	–
		EXT	NONE	–	–	–	–	–	–	–	–	–	–
☑ #3	1	GYRO	HDG	Already	$**HDT	20 ms	–	–	–	–	–	–	–
		EXT	HDG	Already	$**HDG	20 ms	–	–	–	–	–	–	–
	2	GYRO	ROT	Already	$**ROT	20 ms	–	–	–	–	–	–	–
		EXT	ROT	Already	$**ROT	20 ms	–	–	–	–	–	–	–
	3	GYRO	NONE	–	–	–	–	–	–	–	–	–	–
		EXT	NONE	–	–	–	–	–	–	–	–	–	–
☑ #4	1	GYRO	HDG	Already	$**HDT	500 ms	–	–	–	–	–	–	–
	2	GYRO	NONE	–	–	–	–	–	–	–	–	–	–
	3	GYRO	NONE	–	–	–	–	–	–	–	–	–	–

FORMAT REV. GG9DSB_0.0 SIZE A4	DR. T.Wakamatsu	DATE 2013-05-15	CMZ900D/S/B(with C.OPE) ジェネレーション内容 (出力)	
	CH. Y.Takahashi		SIGNAL FORMAT GENERATION FOR CMZ900(with C.OPE) (Output)	
	APP. Y.Oosaka	2013-05-15	NO. R3D2032-04	PAGE 2 OF 2
MICRO	YOKOGAWA Yokogawa Denshikiki Co.,Ltd			

Form Y-12-3

In installation of this system, proper installation works should be done according to the following instructions.

1. Control stand

1) As the master compass is housed in the control stand. It is necessary to leave some space around
the control stand for it's ventilation and for servicing it.

2) As the external connection cables are led through the cable entry at the bottom of the stand. prepare a coaming or etc, in the cable entry hole to prevent water.

3) To install, the base line of the control stand should be parallel to the keel line.

4) Firmly connect the earth terminal (marked ⏚) of the control stand to the ship's body.

5) Do not apply megger test except the terminals for power supply.

6) Cable length for introduction. Approx 1.5m from stand base.

7) Install the base to be the handle height 950mm from floor.

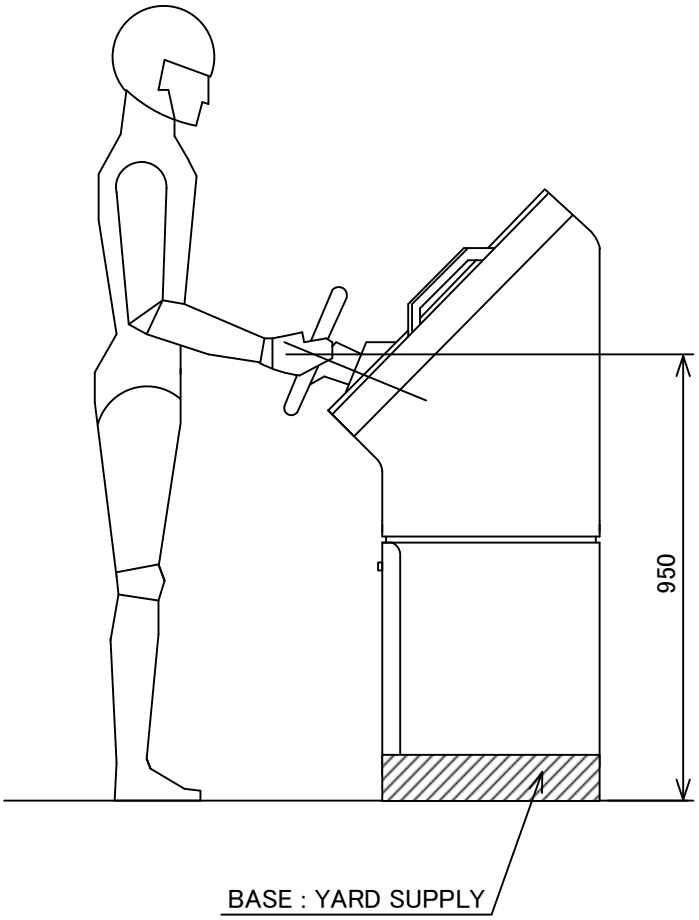

FOR CMZ900

DR.	T.Wakamatsu	2012-06-12	INSTALLATION NOTES
CH.	C.Mibuta	2012-06-12	NO. 8G820Z022-46 / PAGE 1/2
APP.	Y.Oosaka	2012-06-12	

SIZU A4

YOKOGAWA
Yokogawa Denshikiki Co.,Ltd.

2. Repeater compass

1) The base line of the stand of bracket for a bearing repeater should be parallel to the keel line. This parallel accuracy decides the accuracy of the ship's bearing and this accuracy recommended is ±0.5° .

2) The wall, where a bracket for a repeater is installed, should be reinforced enough to prevent the repeater from resonance with the ship's vibration.

3. Safe distance to the magnetic compass

Safe distance for equipments to the standard magnetic compass and steering magnetic compass are listed below.

EQUIPMENT	Standard magnetic compass	Steering magnetic compass
CONTROL STAND PM208/9	1.6m	1.0m
MASTER COMPASS MKM026	0.8m	0.8m
CONTROL BOX MKM326/327	0.8m	0.8m
C. OPERATION UNIT MKR040	0.8m	0.8m
STEERING REPEATER COMPASS MKR056	0.8m	0.8m
REPEATER COMPASS MKR050	0.3m	0.3m
AC ADAPTER MKS070	1.3m	1.3m
DUAL AC ADAPTER MKS071	1.3m	1.3m
RATE OF TURN INDICATOR MKR302	0.5m	0.5m
CONNECTION BOX MKN019	0.1m	0.1m
HORIZONTAL STAND KX223A	0.5m	0.5m
HORIZONTAL BRACKET KX201A	0.4m	0.4m
TILTING BRACKET KX213	0.5m	0.5m
TMC DISPLAY MPC430	0.5m	0.5m
INTERCONNECT UNIT MPN031	0.5m	0.5m

4. Vibration Measures

The floors on which the master compass and the horizontal stands are installed, and the walls on which the remote unit, horizontal brackets, tilting brackets, course recorder, digital repeater compass, etc. are installed, should be reinforced against vibrations from the hull.

In installation of this system, proper installation works should be done according to the following instructions.

1. Master Compass

Install the Master Compass preferably in a place where the ventilation is good and the ambient temperature dose not rise, for example, the bridge or chart room.

In the case when it is installed in a small room elsewhere, particular care is needed on the below-explained points. In all cases, however make sure that the base line of the Master Compass is in parallel to the keel line of the ship. Since the precision for this parallel becomes subsequent azimuth measurement reference, make it within ±0.5° .

1-1. When the Master Compass is installed in the bridge or chart room.

(1) Make sure that there is no obstacle near the cooling fan air-exhaust.

(2) In the case when it is installed near the wall, at least an area of the dimensions given by the following drawing must be provided as the service space (for installation and service purpose) between the Master Compass and the wall.

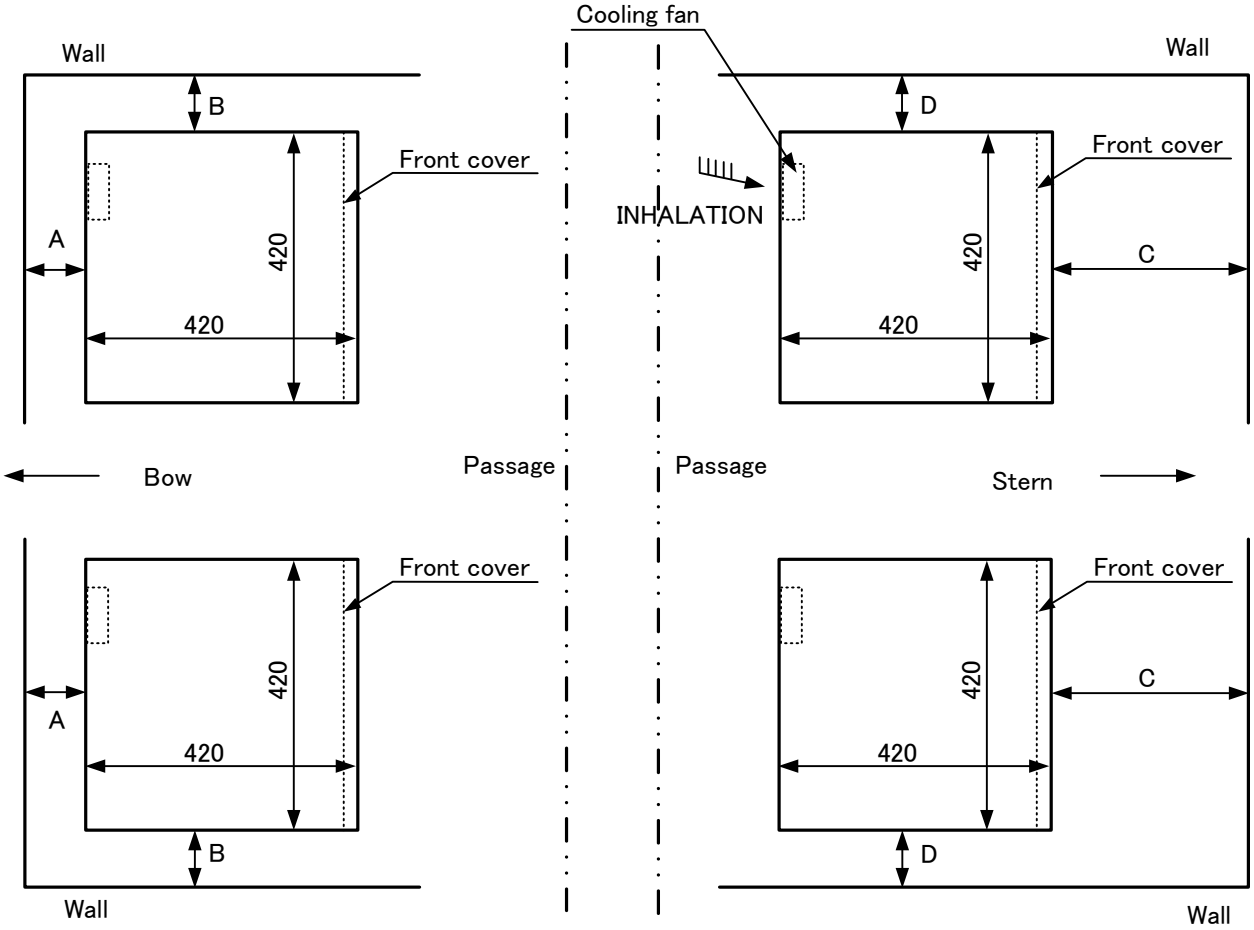

A : More than 300mm
B : More then 300mm

C : More than 1000mm
D : More then 300mm

FOR CMZ900

DR.	S. Ito	2007-01-26	INSTALLATION NOTES
CH.	C.Mibuta	2007-01-26	NO. 8G800D021-61
APP.	C.Mibuta	2007-01-26	PAGE 1/3

SIZU A4

YOKOGAWA
Yokogawa Denshikiki Co.,Ltd.

(3) Since inspection and cleaning of the inside of the Master Compass are required, leave a service space of 1meter above the installation floor.

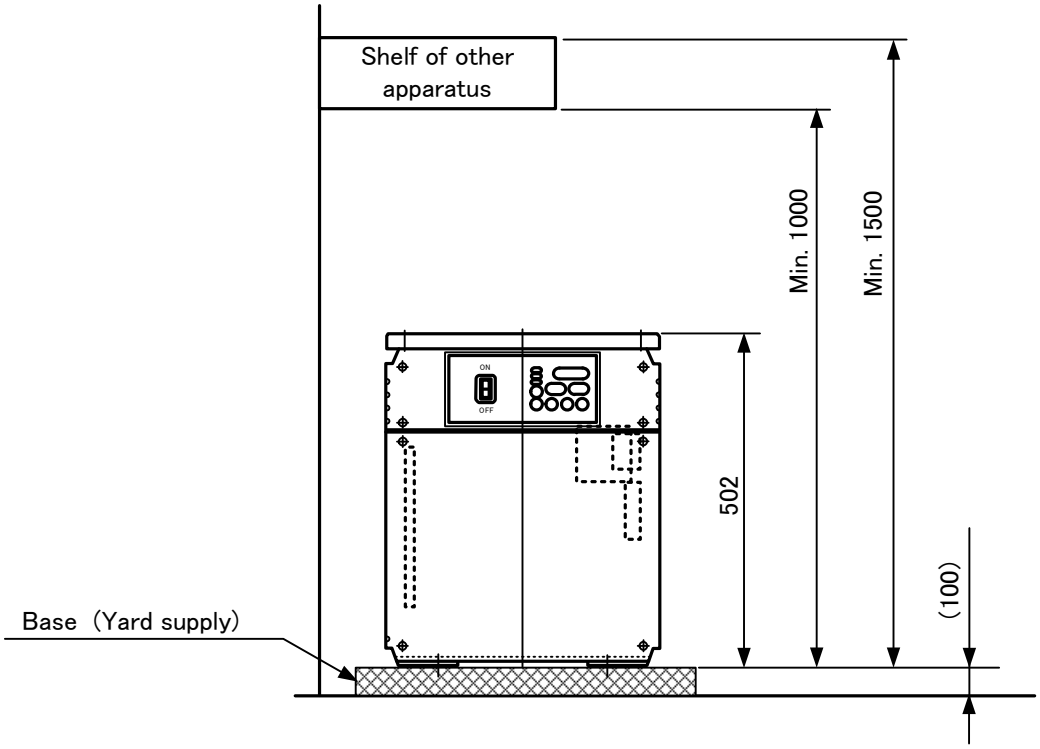

1.2 When the Master Compass is installed in a small room or inside a locker.

(1) The minimum dimensions required for the small room are given by the following drawing; area 1.6㎡ and height more than 1.5m. In this case, do not place the Master Compass together with other apparatus. At the sane time, do not install other fittings near the air exhaust (the bottom part of wooden seat).

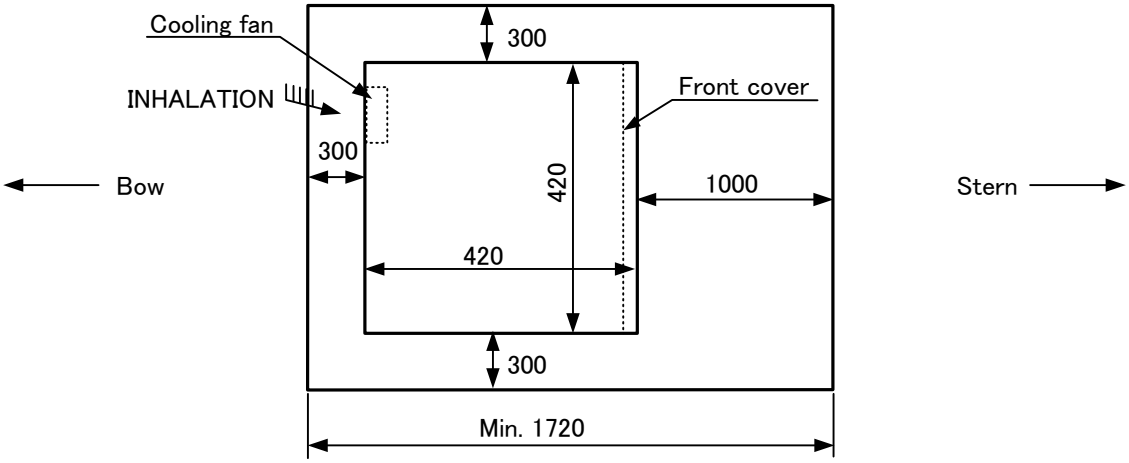

(2) Use heat-reflecting or heart-insulating boards on the wall located in the direction from which heat comes so as to prevent the temperature rise of the small room due to sun heat or other heat radiation.

(3) Use metal-screen doors or drip-proof louvers so as to prevent the heat accumulation in the small room or locker. (In the case when other electric apparatus and instruments are placed in the same room, provided ventilator or air-intake pipe).

(4) Provided a service space in the same way, as described in 1-1 (2), and 1-1 (3) above.

FOR CMZ900

DR.		INSTALLATION NOTES	
CH .		NO. 8G800D021-61	PAGE 2/3
APP.			

SIZU A4

YOKOGAWA
Yokogawa Denshikiki Co.,Ltd.

2. Repeater compass

(1) The base line of the stand or bracket for a bearing repeater should be parallel to the keel line. This parallel accuracy decided the accuracy of the ship's bearing and this accuracy recommended is ±0.2°.

(2) The wall, where a bracket for a repeater is installed, should be reinforced enough to prevent the repeater from resonance with the ship's vibration.

3. Safe distance to the magnetic compass

Safe distance for equipments to the standard magnetic compass and steering magnetic compass are listed below.

EQUIPMENT	Standard magnetic compass	Steering magnetic compass
MASTER COMPASS MKM026	0.8m	0.8m
CONTROL BOX MKM326/327	0.8m	0.8m
C. OPERATION UNIT MKR040	0.8m	0.8m
REPEATER COMPASS MKR050	0.3m	0.3m
AC ADAPTER MKS070	1.3m	1.3m
DUAL AC ADAPTER MKS071	1.3m	1.3m
RATE OF TURN INDICATOR MKR302	0.5m	0.5m
CONNECTION BOX MKN019	0.1m	0.1m
HORIZONTAL STAND KX223A	0.5m	0.5m
HORIZONTAL BRACKET KX201A	0.4m	0.4m
TILTING BRACKET KX213	0.5m	0.5m
TMC DISPLAY MPC430	0.5m	0.5m
INTERCONNECT UNIT MPN031	0.5m	0.5m

4. Vibration Measures

The floors which the Master Compass and Horizontal stands are installed, and the walls on which the Remote unit, Horizontal brackets, Tilting brackets, Course recorder, Digital repeater, etc. are installed, should be reinforced against vibrations from the hull.

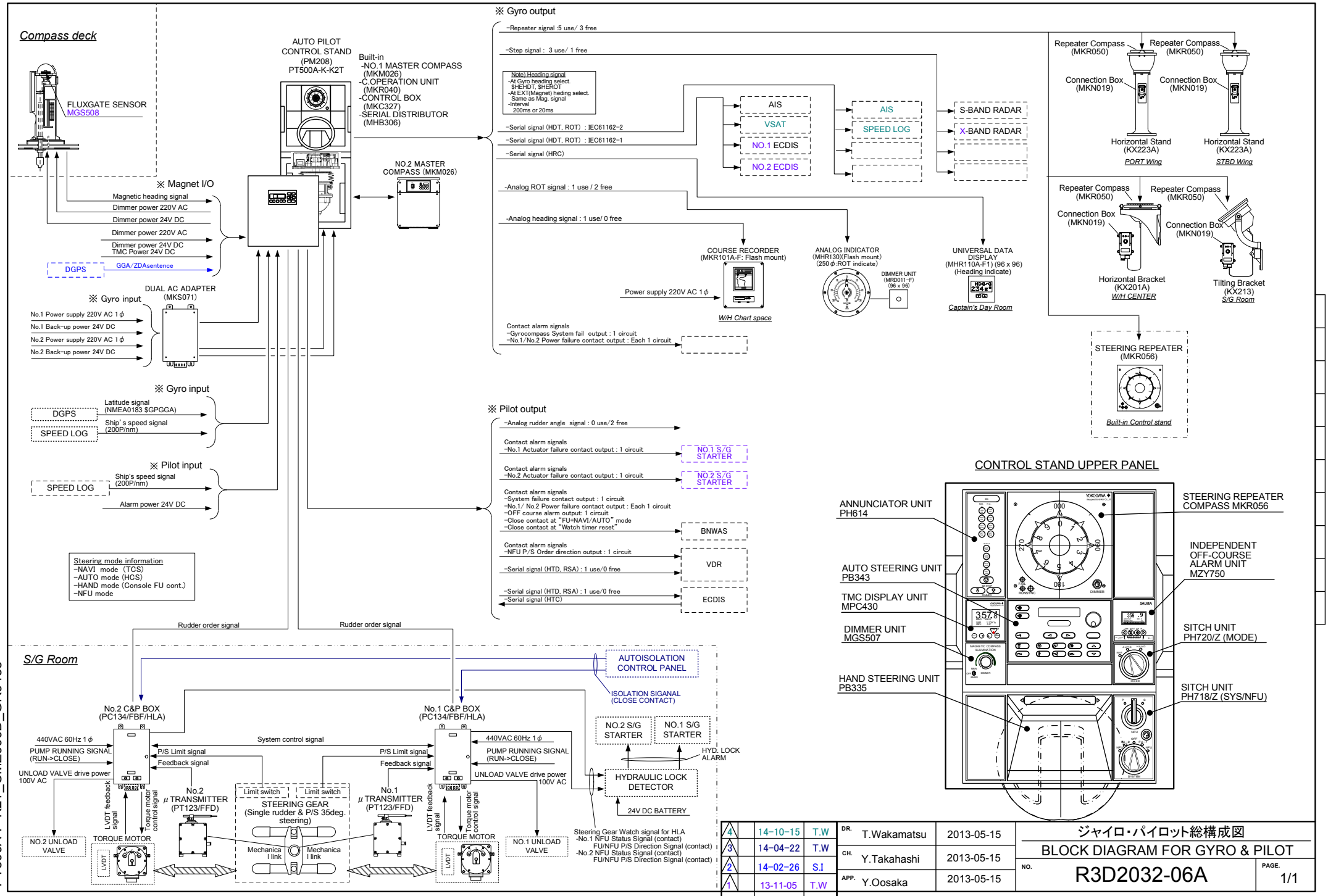

PT500A-P-K2T_CMZ900D_GR9435

4	14-10-15	T.W	
3	14-04-22	T.W	
2	14-02-26	S.I	
1	13-11-05	T.W	
MICRO	– –		

DR.	T.Wakamatsu	2013-05-15
CH.	Y.Takahashi	2013-05-15
APP.	Y.Oosaka	2013-05-15

ジャイロ・パイロット総構成図

BLOCK DIAGRAM FOR GYRO & PILOT

NO. R3D2032-06A

PAGE. 1/1

SIZE A3

YOKOGAWA ◆
Yokogawa Denshikiki Co.,Ltd.

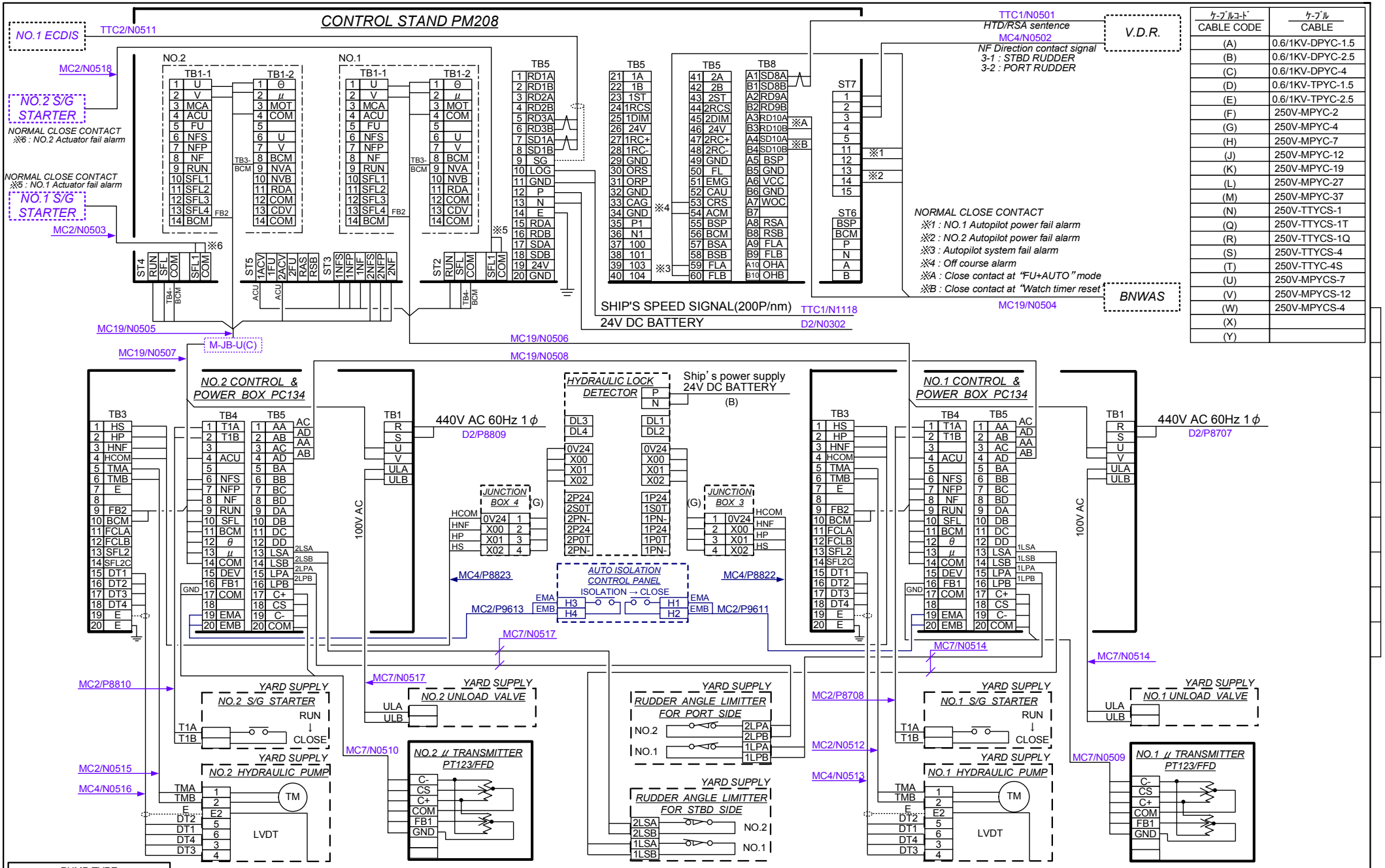

ケーブルコード CABLE CODE	ケーブル CABLE
(A)	0.6/1KV-DPYC-1.5
(B)	0.6/1KV-DPYC-2.5
(C)	0.6/1KV-DPYC-4
(D)	0.6/1KV-TPYC-1.5
(E)	0.6/1KV-TPYC-2.5
(F)	250V-MPYC-2
(G)	250V-MPYC-4
(H)	250V-MPYC-7
(J)	250V-MPYC-12
(K)	250V-MPYC-19
(L)	250V-MPYC-27
(M)	250V-MPYC-37
(N)	250V-TTYCS-1
(Q)	250V-TTYCS-1T
(R)	250V-TTYCS-1Q
(S)	250V-TTYCS-4
(T)	250V-TTYC-4S
(U)	250V-MPYCS-7
(V)	250V-MPYCS-12
(W)	250V-MPYCS-4
(X)	
(Y)	

PUMP TYPE			
LV120,180, 260,500		LV030,060, 090	
DT1	6	DT1	5
DT2	5	DT2	6

PT500A-K2T/FBF/HLA GR9435

3	– –		
2	– –		
2	14-04-22	T.W	
1	13-11-05	T.W	
MICRO	– –		

DR. T.Wakamatsu	2013-05-15	オートパイロットシステム系統図 PT500A-K2T
CH. Y.Takahashi	2013-05-15	AUTOPILOT OVERALL SYSTEM DIAGRAM
APP. Y.Oosaka	2013-05-15	NO. R3D2032-05 PAGE. 1/1

SIZE A3

YOKOGAWA
Yokogawa Denshikiki Co.,Ltd.

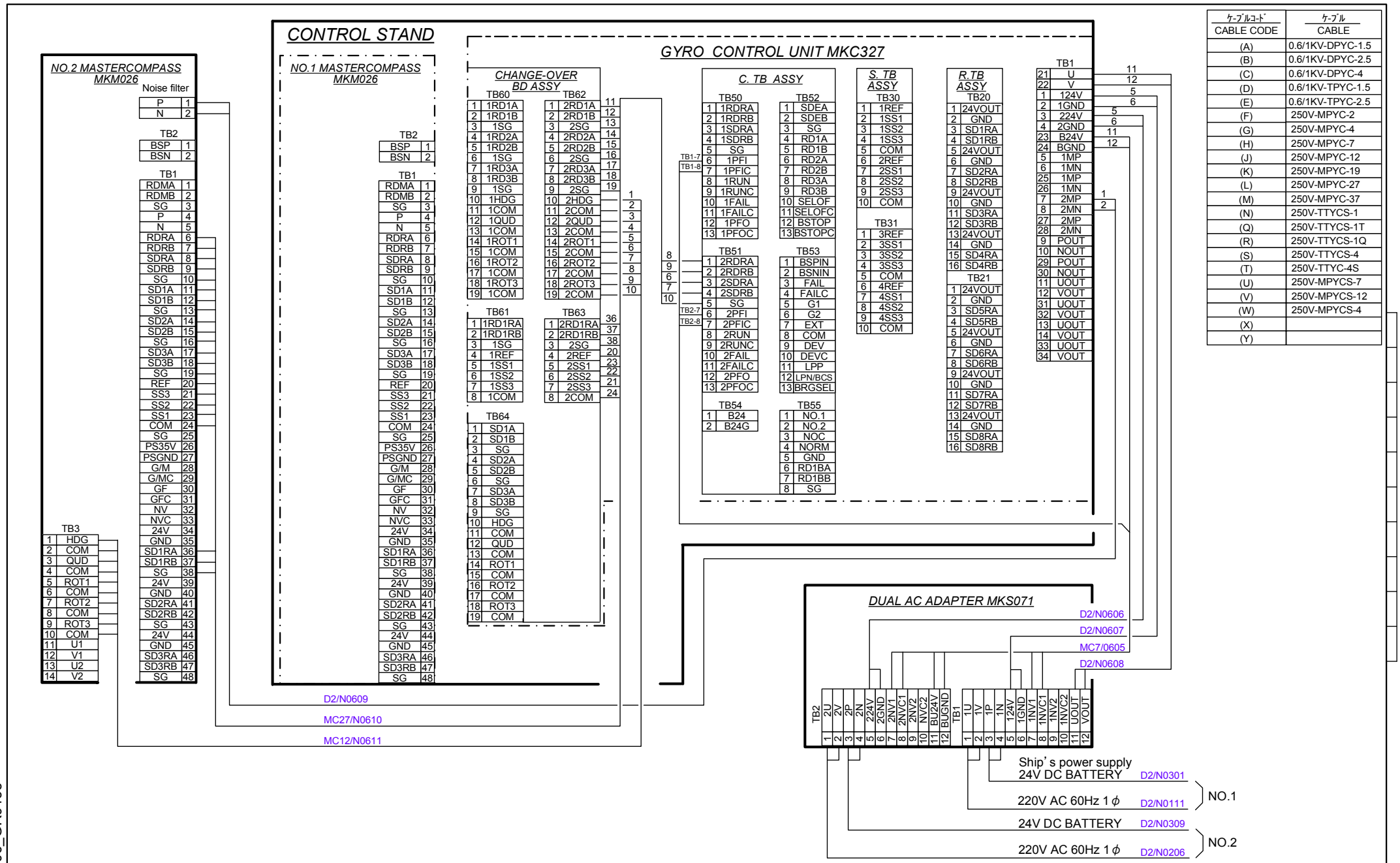

ｹｰﾌﾞﾙｺｰﾄﾞ CABLE CODE	ｹｰﾌﾞﾙ CABLE
(A)	0.6/1KV-DPYC-1.5
(B)	0.6/1KV-DPYC-2.5
(C)	0.6/1KV-DPYC-4
(D)	0.6/1KV-TPYC-1.5
(E)	0.6/1KV-TPYC-2.5
(F)	250V-MPYC-2
(G)	250V-MPYC-4
(H)	250V-MPYC-7
(J)	250V-MPYC-12
(K)	250V-MPYC-19
(L)	250V-MPYC-27
(M)	250V-MPYC-37
(N)	250V-TTYCS-1
(Q)	250V-TTYCS-1T
(R)	250V-TTYCS-1Q
(S)	250V-TTYCS-4
(T)	250V-TTYC-4S
(U)	250V-MPYCS-7
(V)	250V-MPYCS-12
(W)	250V-MPYCS-4
(X)	
(Y)	

	– –	DR. T.Wakamatsu	2013-05-15	ジャイロコンパスシステム系統図 OVERALL SYSTEM DIAGRAM(GYROCOMPASS)	
	– –	CH. Y.Takahashi	2013-05-15	NO. R3D2032-06	PAGE. 1/3
	– –	APP. Y.Oosaka	2013-05-15		
1	13-11-05 T.W				
MICRO	– –				

YOKOGAWA
Yokogawa Denshikiki Co.,Ltd.

CMZ900D-06_GR9435

SIZE A3

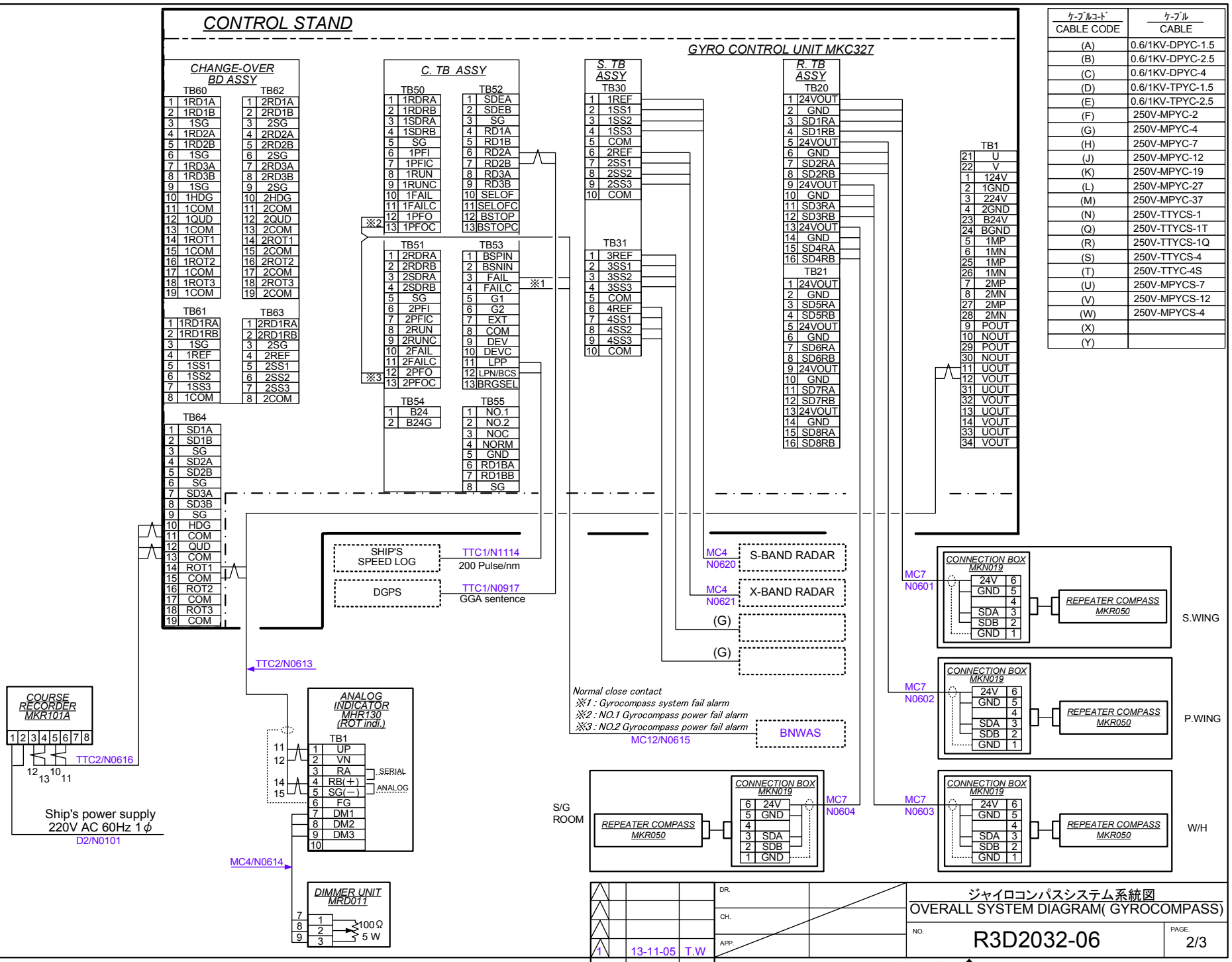

ケーブルコード CABLE CODE	ケーブル CABLE
(A)	0.6/1KV-DPYC-1.5
(B)	0.6/1KV-DPYC-2.5
(C)	0.6/1KV-DPYC-4
(D)	0.6/1KV-TPYC-1.5
(E)	0.6/1KV-TPYC-2.5
(F)	250V-MPYC-2
(G)	250V-MPYC-4
(H)	250V-MPYC-7
(J)	250V-MPYC-12
(K)	250V-MPYC-19
(L)	250V-MPYC-27
(M)	250V-MPYC-37
(N)	250V-TTYCS-1
(Q)	250V-TTYCS-1T
(R)	250V-TTYCS-1Q
(S)	250V-TTYCS-4
(T)	250V-TTYC-4S
(U)	250V-MPYCS-7
(V)	250V-MPYCS-12
(W)	250V-MPYCS-4
(X)	
(Y)	

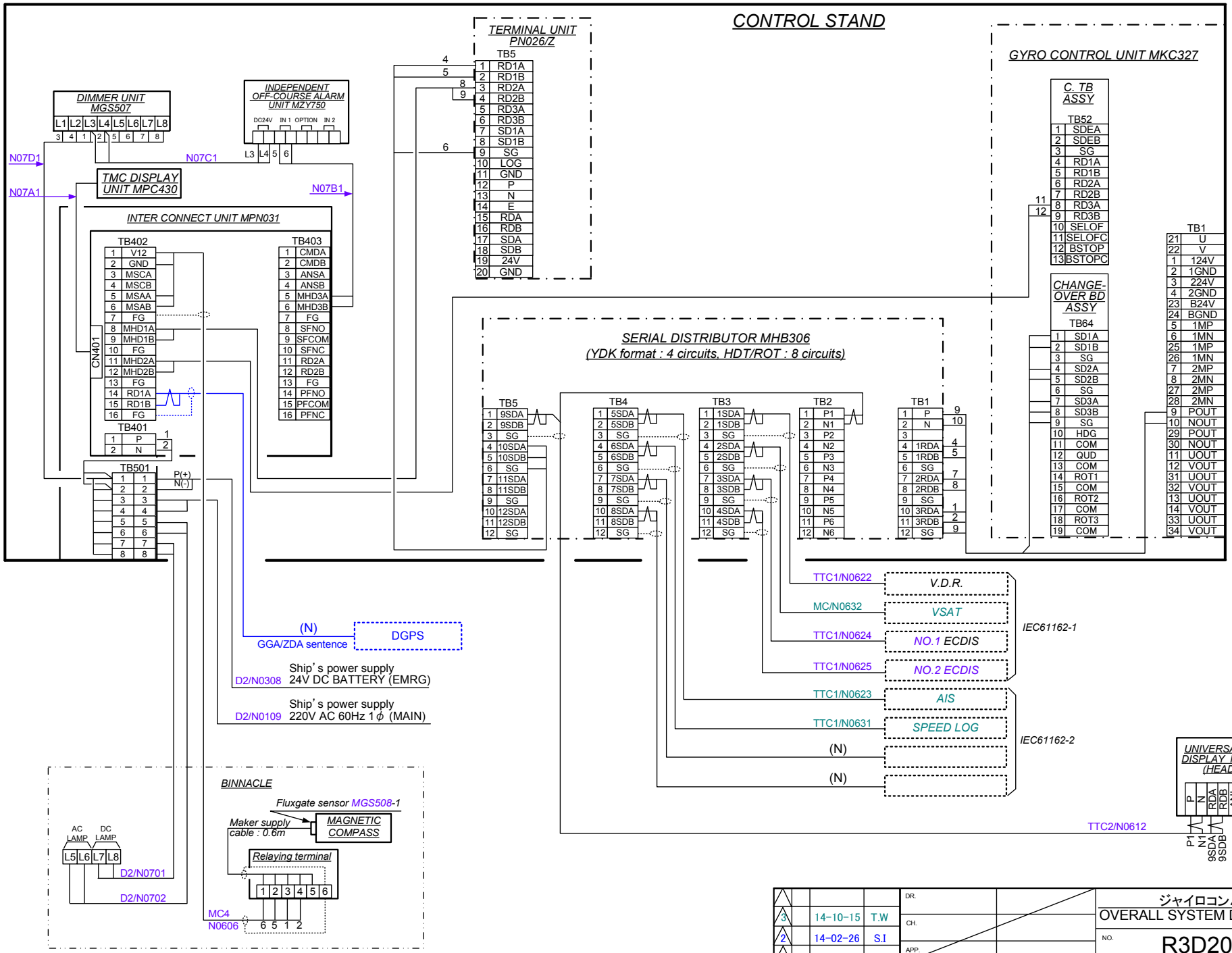

ケーブルコード CABLE CODE	ケーブル CABLE
(A)	0.6/1KV-DPYC-1.5
(B)	0.6/1KV-DPYC-2.5
(C)	0.6/1KV-DPYC-4
(D)	0.6/1KV-TPYC-1.5
(E)	0.6/1KV-TPYC-2.5
(F)	250V-MPYC-2
(G)	250V-MPYC-4
(H)	250V-MPYC-7
(J)	250V-MPYC-12
(K)	250V-MPYC-19
(L)	250V-MPYC-27
(M)	250V-MPYC-37
(N)	250V-TTYCS-1
(Q)	250V-TTYCS-1T
(R)	250V-TTYCS-1Q
(S)	250V-TTYCS-4
(T)	250V-TTYC-4S
(U)	250V-MPYCS-7
(V)	250V-MPYCS-12
(W)	250V-MPYCS-4
(X)	
(Y)	

3	14-10-15	T.W	DR.
2	14-02-26	S.I	CH.
1	13-11-05	T.W	APP.
MICRO	– –		

ジャイロコンパスシステム系統図
OVERALL SYSTEM DIAGRAM(GYROCOMPASS)

NO. R3D2032-06

PAGE. 3/3

YOKOGAWA
Yokogawa Denshikiki Co.,Ltd.

CMZ900D-06

SIZE A3

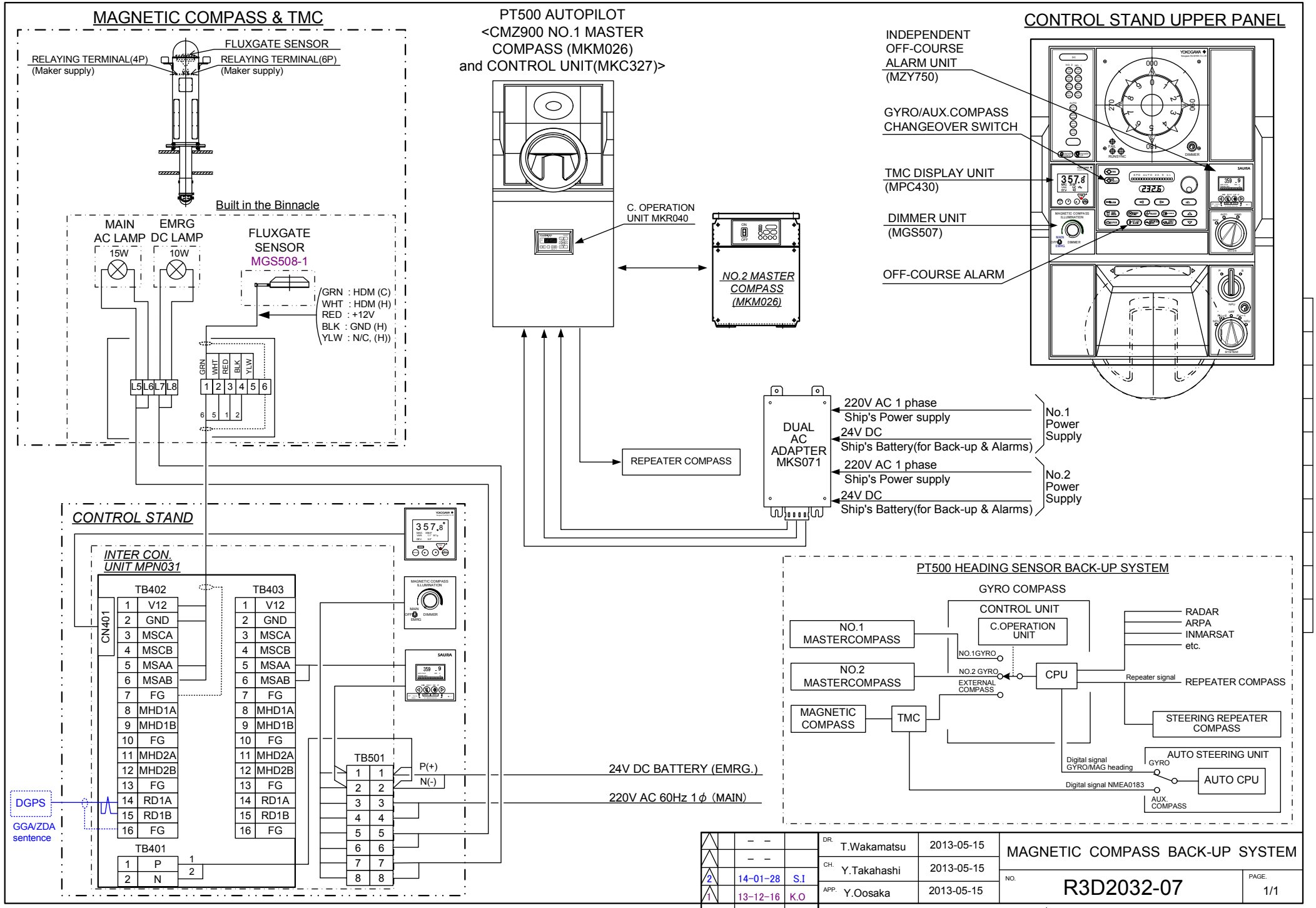

	– –		DR. T.Wakamatsu	2013-05-15	MAGNETIC COMPASS BACK-UP SYSTEM	
	– –		CH. Y.Takahashi	2013-05-15		
2	14-01-28	S.I	APP. Y.Oosaka	2013-05-15	NO. R3D2032-07	PAGE. 1/1
1	13-12-16	K.O				
MICRO	– –					

CMZ900D-10 SAURA_GR9435

SIZE A3

YOKOGAWA
Yokogawa Denshikiki Co.,Ltd.

MODEL	PM208/209
MASS	116 kg

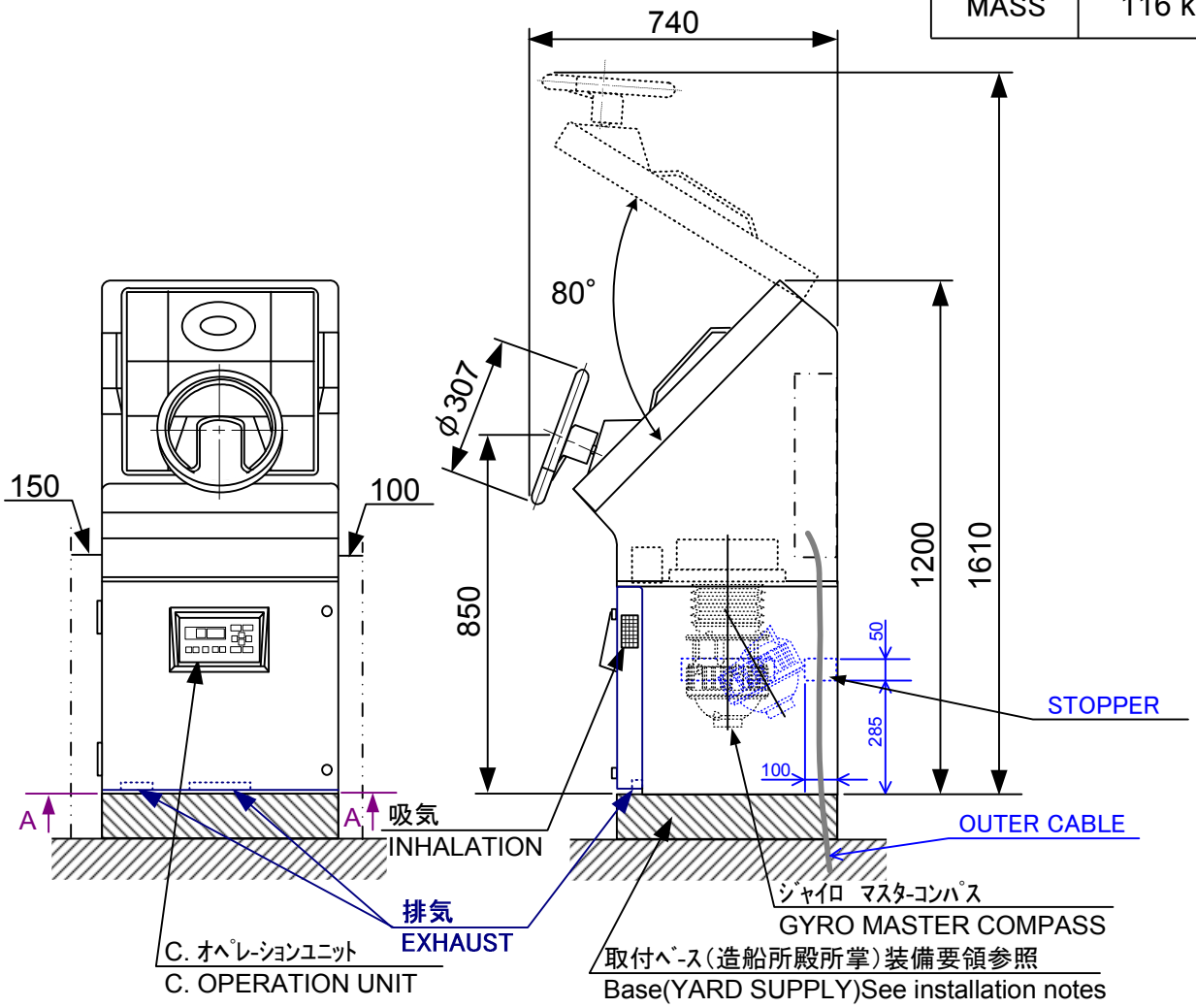

取付寸法
FIXING DIMENSION

A-A断面
SECTION A-A

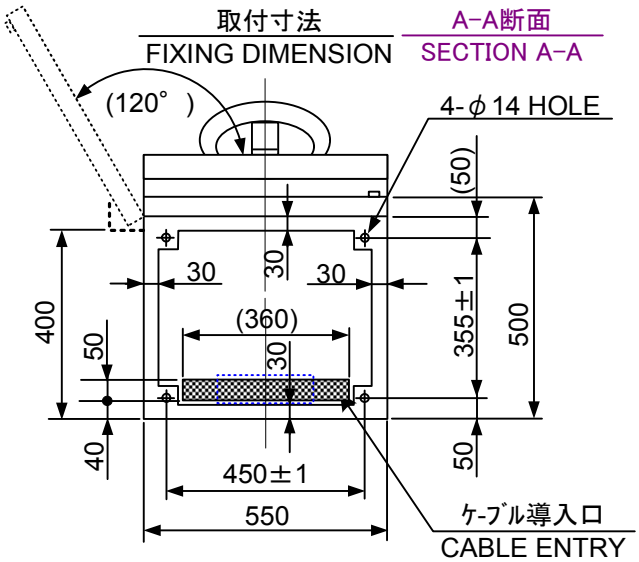

注:外部ｹｰﾌﾞﾙ導入長、ｽﾀﾝﾄﾞ底面から約1.5m
NOTE:Cable length for introduction
Approx 1.5m from stand base.

端子配置図
TERMINAL ARRANGEMENT

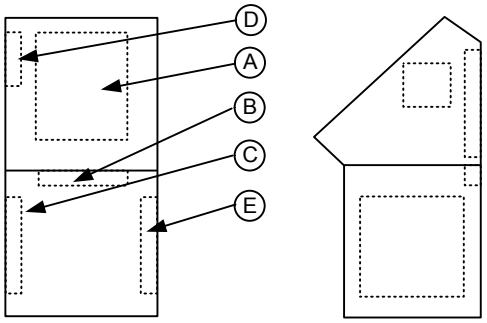

A	TB1-1, TB1-2, TB5, TB8, ST2 to ST7	PILOT POWER SUPPLY & SIGNAL
B		
C	TB20,21,30,31,TB50 to TB55, TB60 to TB64	REPEATER & STEPPER & OTHERS
D	TB401, 402, 501	INTERCONNECT UNIT
E	TB1 TB1 to TB5	GYRO POWER SUPPLY & OTHERS SERIAL DISTRIBUTOR

MKN018	無し
MKR040	内蔵
NO.1 MKM026	内蔵
MKC327	内蔵
GYROSYSTEM CMZ900D	

2	11-09-27	C.M	DR. K.Oda	2007-04-18	コントロールスタンド CONTROL STAND
1	08-02-26	C.M	CH. C.Mibuta	2007-04-18	NO. 8G820A105-26
			APP. C.Mibuta	2007-04-18	PAGE 1/4

H
SIZU A4

YOKOGAWA
Yokogawa Denshikiki Co.,Ltd.

C. オペレーションユニット詳細図
DETAIL OF C. OPERATION UNIT

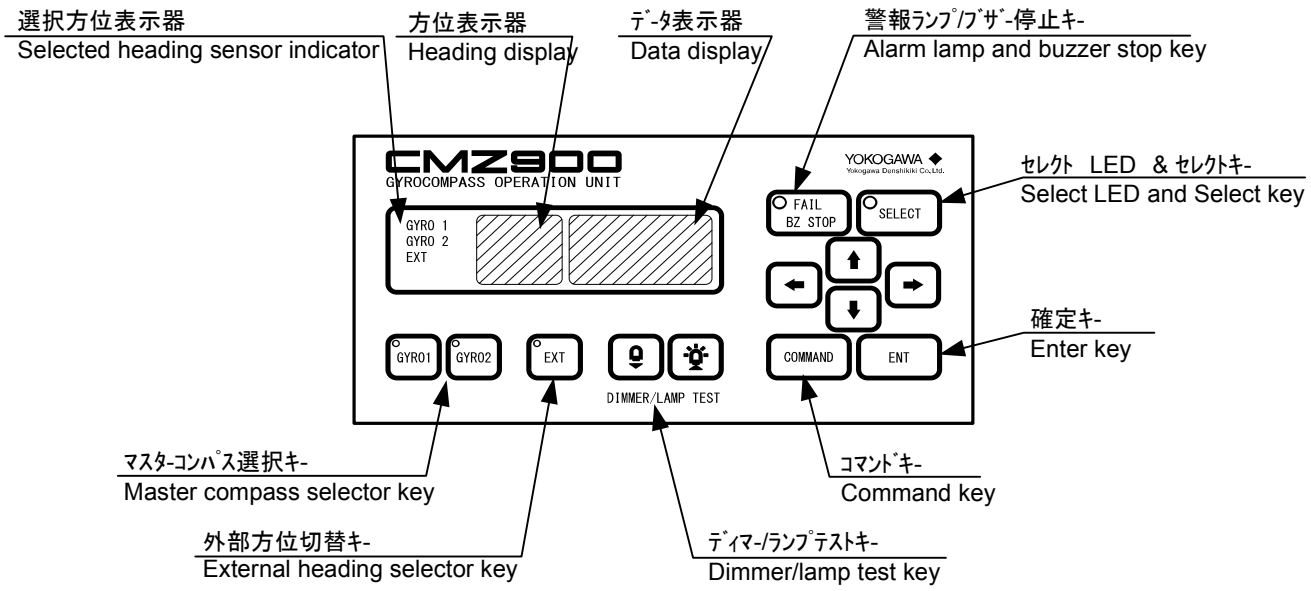

TB1

21	U	AC 電源入力
22	V	AC source input
1	124V	NO.1 24V DC 入力
2	1GND	NO.1 24V DC input
3	224V	NO.2 24V DC 入力
4	2GND	NO.2 24V DC input
23	B24V	BU 24V DC 入力
24	BGND	BU 24V DC input
5	1MP	DC 出力 (NO.1 ﾏｽﾀｰｺﾝﾊﾟｽ用)
6	1MN	DC output (For NO.1 Master compass)
25	1MP	
26	1MN	
7	2MP	DC 出力 (NO.2 ﾏｽﾀｰｺﾝﾊﾟｽ用)
8	2MN	DC output (For NO.2 Master compass)
27	2MP	
28	2MN	
9	POUT	DC 出力
10	NOUT	DC output
29	POUT	DC 出力
30	NOUT	DC output
11	UOUT	AC 出力
12	VOUT	AC output
31	UOUT	AC 出力
32	VOUT	AC output
13	UOUT	AC 出力
14	VOUT	AC output
33	UOUT	AC 出力
34	VOUT	AC output

TB30 S. TERMINAL BD ASSY

1	1REF	ｽﾃｯﾊﾟ信号出力1
2	1SS1	Stepper signal output1
3	1SS2	
4	1SS3	
5	COM	
6	2REF	ｽﾃｯﾊﾟ信号出力2
7	2SS1	Stepper signal output2
8	2SS2	
9	2SS3	
10	COM	

TB31

1	3REF	ｽﾃｯﾊﾟ信号出力3
2	3SS1	Stepper signal output3
3	3SS2	
4	3SS3	
5	COM	
6	4REF	ｽﾃｯﾊﾟ信号出力4
7	4SS1	Stepper signal output4
8	4SS2	
9	4SS3	
10	COM	

DR.	CMZ900D ｺﾝﾄﾛｰﾙﾕﾆｯﾄ CMZ900D CONTROL UNIT	
CH.	NO. 8G820A105-26	PAGE 2/4
APP.		

SIZU A4

YOKOGAWA
Yokogawa Denshikiki Co.,Ltd.

C. TERMINAL BOARD ASSY

TB50

1	1RDRA	シリアル信号I/O Serial signal I/O
2	1RDRB	
3	1SDRA	
4	1SDRB	
5	SG	
6	1PFI	電源異常信号 接点入力 Power fail signal contact input
7	1PFIC	
8	1RUN	運転信号 接点出力 Running signal contact output
9	1RUNC	
10	1FAIL	異常信号 接点出力 Fail signal contact output
11	1FAILC	
12	1PFO	電源異常信号 接点出力 Power fail signal contact output
13	1PFOC	

TB51

1	2RDRA	シリアル信号I/O Serial signal I/O
2	2RDRB	
3	2SDRA	
4	2SDRB	
5	SG	
6	2PFI	電源異常信号 接点入力 Power fail signal contact input
7	2PFIC	
8	2RUN	運転信号 接点出力 Running signal contact output
9	2RUNC	
10	2FAIL	異常信号 接点出力 Fail signal contact output
11	2FAILC	
12	2PFO	電源異常信号 接点出力 Power fail signal contact output
13	2PFOC	

TB52

1	SDEA	非選択シリアルデータ出力 Serial data output 1(IEC61162-1)
2	SDEB	
3	SG	
4	RD1A	シリアルデータ入力1 Serial data input 1 (Speed log)
5	RD1B	
6	RD2A	シリアルデータ入力2 Serial data input 2
7	RD2B	
8	RD3A	シリアルデータ入力3 Serial data input 3
9	RD3B	
10	SELOF	コンパス切換ステータス保持入力 Compass select lock status input
11	SELOFC	
12	BSTOP	ブザーストップ接点出力 Buzzer stop contact output
13	BSTOPC	

TB53

1	BSPIN	ブザーストップ接点入力 Buzzer stop contact input
2	BSNIN	
3	FAIL	システムフェイル接点出力 System fail contact output
4	FAILC	
5	G1	選択方位接点出力 Heading selection contact output
6	G2	
7	EXT	
8	COM	
9	DEV	偏差信号接点出力 Deviation contact output
10	DEVC	
11	LPP	ログパルス入力 Pluse input(Ship's speed)
12	LPN/BSC	
13	BRGSEL	マスターコンパス船首尾切換入力 Bow or Stern select status input

TB55

1	NO.1	
2	NO.2	
3	NOC	
4	NORM	
5	GND	
6	RD1BA	シリアルデータ出力 Serial data output (Speed log)
7	RD1BB	
8	SG	

TB54

1	B24
2	B24G

R. TERMINAL BD ASSY

TB20

1	24VOUT	シリアル信号出力1(レピータコンパス用) Serial signal output1 (For repeater compass)
2	GND	
3	SD1RA	
4	SD1RB	
5	24VOUT	シリアル信号出力2(レピータコンパス用) Serial signal output2 (For repeater compass)
6	GND	
7	SD2RA	
8	SD2RB	
9	24VOUT	シリアル信号出力3(レピータコンパス用) Serial signal output3 (For repeater compass)
10	GND	
11	SD3RA	
12	SD3RB	
13	24VOUT	シリアル信号出力4(レピータコンパス用) Serial signal output4 (For repeater compass)
14	GND	
15	SD4RA	
16	SD4RB	

TB21

1	24VOUT	シリアル信号出力5(レピータコンパス用) Serial signal output5 (For repeater compass)
2	GND	
3	SD5RA	
4	SD5RB	
5	24VOUT	シリアル信号出力6(レピータコンパス用) Serial signal output6 (For repeater compass)
6	GND	
7	SD6RA	
8	SD6RB	
9	24VOUT	シリアル信号出力7(レピータコンパス用) Serial signal output7 (For repeater compass)
10	GND	
11	SD7RA	
12	SD7RB	
13	24VOUT	シリアル信号出力8(レピータコンパス用) Serial signal output8 (For repeater compass)
14	GND	
15	SD8RA	
16	SD8RB	

CHANGE-OVER BD ASSY

NO.1

TB60

1	1RD1A
2	1RD1B
3	1SG
4	1RD2A
5	1RD2B
6	1SG
7	1RD3A
8	1RD3B
9	1SG
10	1HDG
11	1COM
12	1QUD
13	1COM
14	1ROT1
15	1COM
16	1ROT2
17	1COM
18	1ROT3
19	1COM

ｼﾘｱﾙﾃﾞｰﾀ入力1
Serial data input 1

ｼﾘｱﾙﾃﾞｰﾀ入力2
Serial data input 2

ｼﾘｱﾙﾃﾞｰﾀ入力3
Serial data input 3

ｱﾅﾛｸﾞ信号入力
Analog data input

TB61

1	2RD1RA
2	2RD1RB
3	2SG
4	2REF
5	2SS1
6	2SS2
7	2SS3
8	2COM

ｼﾘｱﾙﾃﾞｰﾀ入力
(ﾚﾋﾟｰﾀｺﾝﾊﾟｽ用)
Serial data input
(Repeater compass)

ｽﾃｯﾊﾟ信号入力
Stepper signal input

NO.2

TB62

1	2RD1A
2	2RD1B
3	2SG
4	2RD2A
5	2RD2B
6	2SG
7	2RD3A
8	2RD3B
9	2SG
10	2HDG
11	2COM
12	2QUD
13	2COM
14	2ROT1
15	2COM
16	2ROT2
17	2COM
18	2ROT3
19	2COM

ｼﾘｱﾙﾃﾞｰﾀ入力1
Serial data input 1

ｼﾘｱﾙﾃﾞｰﾀ入力2
Serial data input 2

ｼﾘｱﾙﾃﾞｰﾀ入力3
Serial data input 3

ｱﾅﾛｸﾞ信号入力
Analog data input

TB63

1	2RD1RA
2	2RD1RB
3	2SG
4	2REF
5	2SS1
6	2SS2
7	2SS3
8	2COM

ｼﾘｱﾙﾃﾞｰﾀ入力
(ﾚﾋﾟｰﾀｺﾝﾊﾟｽ用)
Serial data input
(Repeater compass)

ｽﾃｯﾊﾟ信号入力
Stepper signal input

TB64

1	SD1A
2	SD1B
3	SG
4	SD2A
5	SD2B
6	SG
7	SD3A
8	SD3B
9	SG
10	HDG
11	COM
12	QUD
13	COM
14	ROT1
15	COM
16	ROT2
17	COM
18	ROT3
19	COM

ｼﾘｱﾙﾃﾞｰﾀ出力1(NMEA)
Serial data output 1(NMEA)

ｼﾘｱﾙﾃﾞｰﾀ出力2(NMEA)
Serial data output 2(NMEA)

ｼﾘｱﾙﾃﾞｰﾀ出力3(NMEA)
Serial data output 3(NMEA)

ｱﾅﾛｸﾞ出力(方位/象限)
Analog output (HDG/QUD)

ｱﾅﾛｸﾞ出力1(ﾚｰﾄｵﾌﾞﾀｰﾝ)
Analog output 1 (ROT)

ｱﾅﾛｸﾞ出力2(ﾚｰﾄｵﾌﾞﾀｰﾝ)
Analog output 2 (ROT)

ｱﾅﾛｸﾞ出力3(ﾚｰﾄｵﾌﾞﾀｰﾝ)
Analog output 3 (ROT)

DR.	CMZ900D ｺﾝﾄﾛｰﾙﾕﾆｯﾄ CMZ900D CONTROL UNIT		
CH .	NO. 8G820A105-26	PAGE 4/4	
APP.			

SIZU A4

YOKOGAWA
Yokogawa Denshikiki Co.,Ltd.

上部パネル
UPPER PANEL

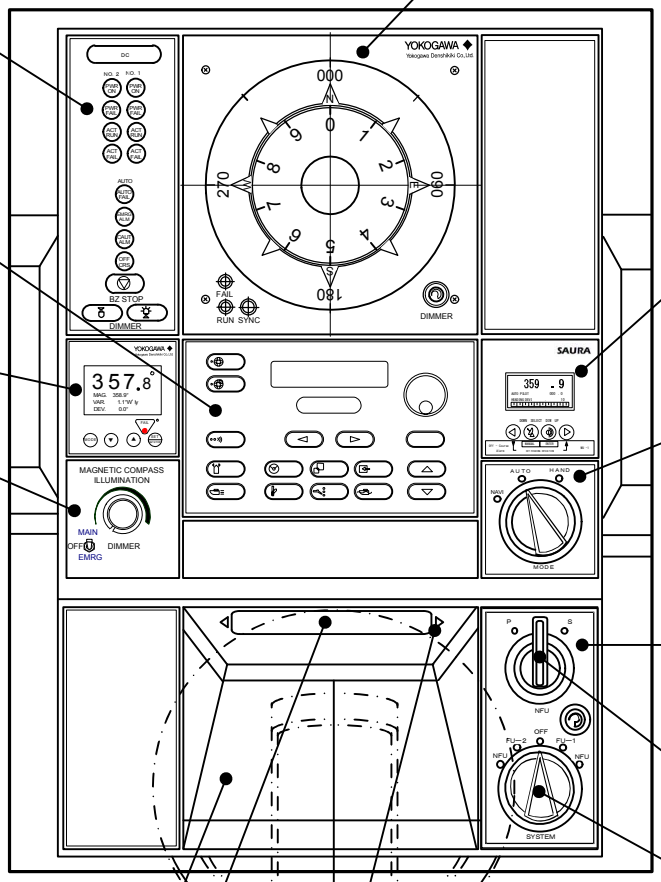

操舵レピータコンパス (MKR056)
STEERING REPEATER COMPASS

個別表示灯
ANNUNCIATOR UNIT
(PH614)

オートステアリングユニット
AUTO STEERING UNIT
(PB343)

TMC 表示器
TMC DISPLAY UNIT
(MPC430)

照明ﾕﾆｯﾄ
DIMMER UNIT (MGS507)

INDEPENDENT
OFF-COURSE
ALARM UNIT
(MZY750)

スイッチユニット
SWITCH UNIT
(PH720/Z)

操舵ﾓｰﾄﾞ切換ｽｲｯﾁ
STEERING MODE
SELECTOR SWITCH

スイッチユニット
SWITCH UNIT
(PH718/Z)

無追従操舵ﾚﾊﾞｰ
NON FOLLOW-UP
STEERING LEVER

ｼｽﾃﾑ切換ｽｲｯﾁ
SYSTEM SELECTOR
SWITCH

手動操舵ユニット (PB335)
HAND STEERING UNIT

操舵角指示器
STEERING ANGLE INDICATOR

操舵方向表示灯
STEERING DIRECTION INDICATOR LAMPS

操舵ハンドル
STEERING HANDLE

PT500A-H2/Y2/K2T/S2/T2

DR. K.Oda	2012-06-12	上部パネル UPPER PANEL	
CH. C.Mibuta	2012-06-12	NO. R3D2032-10	PAGE. 1/5
APP. Y.Oosaka	2012-06-12		

SIZE A4

MICRO – –

YOKOGAWA
Yokogawa Densikiki Co.,Ltd.

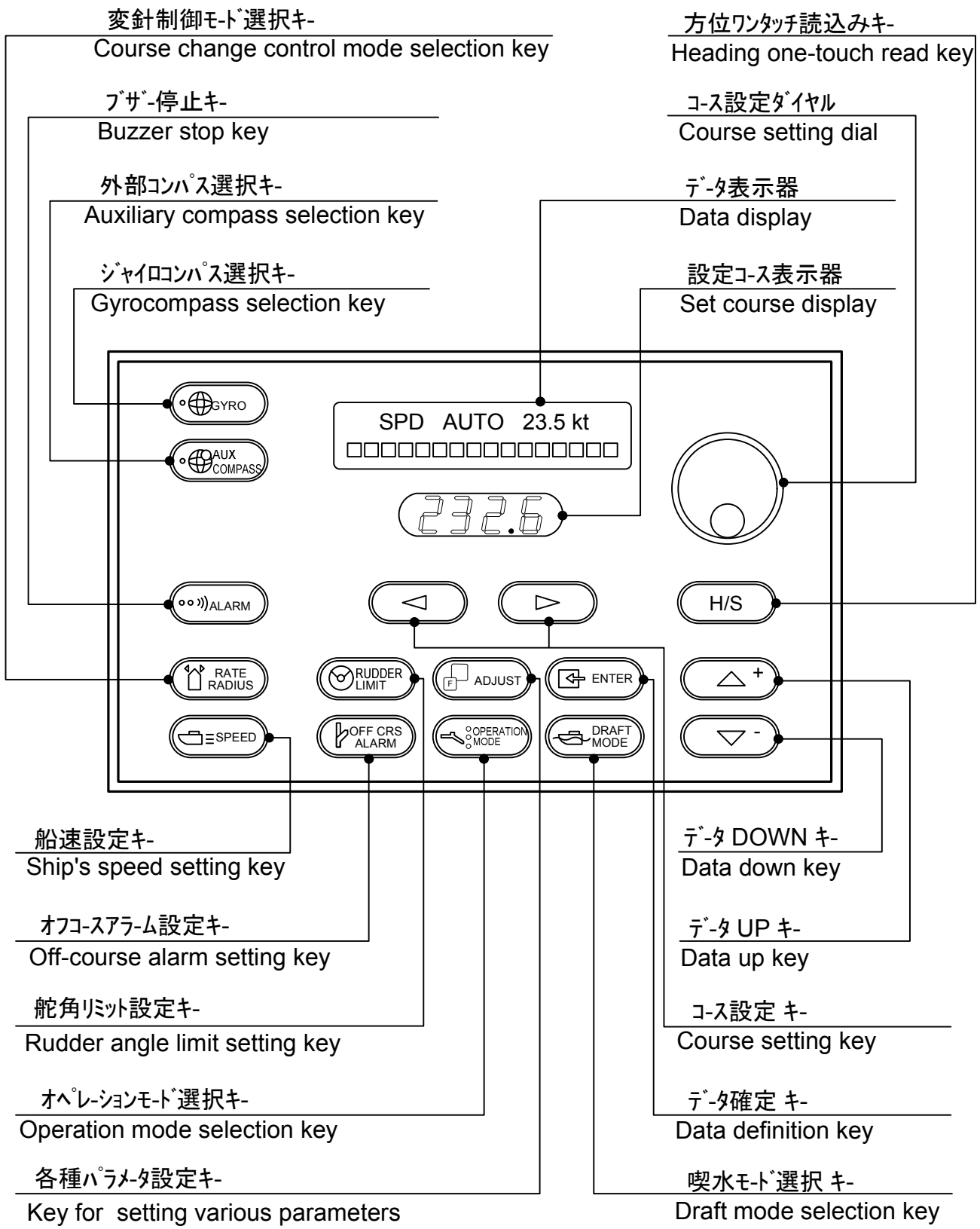

PT500A

			DR.	オートステアリングユニット AUTO STEERING UNIT	
			CH.		
			APP.	NO. R3D2032-10	PAGE. 2/5
MICRO	− −				

SIZE A4

YOKOGAWA
Yokogawa Densikiki Co.,Ltd.

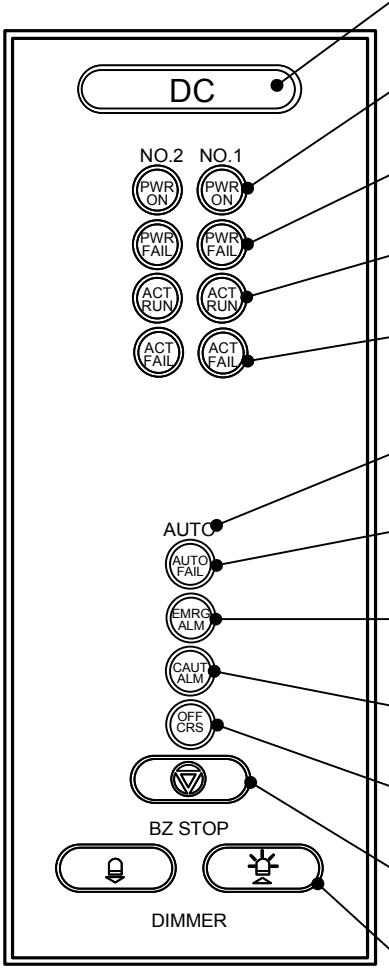

24V DC (ﾊﾞｯﾃﾘｰ) 電源表示灯 （黄）
24V DC (battery) power indicator lamp (yellow)

100V AC 電源表示灯 （黄）
100V AC power indicator lamps (yellow) : NO.1 & NO.2

100V AC 無電圧警報灯 （赤）
100V AC no-volt alarm lamps (red) : NO.1 & NO.2

ｱｸﾁｭｴｰﾀ運転表示灯 （黄）
Actuator run indicator lamps (yellow) : NO.1 & NO.2

ｱｸﾁｭｴｰﾀ異常警報灯 （赤）
Actuator failure alarm lamps (red) : NO.1 & NO.2

運転表示灯
Auto steering unit indicator lamp

ｵｰﾄｽﾃｱﾘﾝｸﾞﾕﾆｯﾄ異常警報灯 （赤）
Auto steering unit failure lamp (red)

”緊急” 代表警報灯 （赤）
Emergency alarm lamp (red)

”注意” 代表警報灯 （赤）
Caution alarm lamp (red)

ｵﾌｺｰｽ警報灯 （赤）
Off-course alarm lamp (red)

ﾌﾞｻﾞｰｽﾄｯﾌﾟｷｰ
Buzzer stop key

ﾃﾞｨﾏ/ﾗﾝﾌﾟﾃｽﾄｷｰ
Dimmer/lamp-test keys

			DR.	アナンシェータユニット ANNUNCIATOR UNIT	
			CH.	NO. R3D2032-10	PAGE. 3/5
			APP.		
MICRO	− −				

SIZE A4

YOKOGAWA
Yokogawa Densikiki Co.,Ltd.

SWITCH UNIT （PH720/Z)

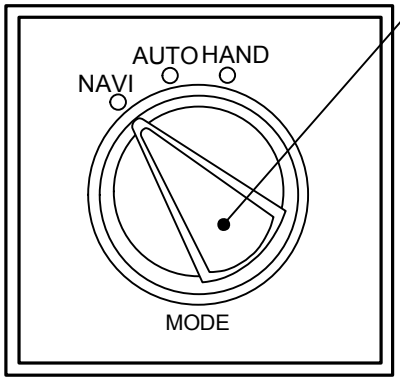

操舵モード切換スイッチ
STEERING MODE SELECTOR SWITCH

NAVI ：外部操舵モード
External steering mode

AUTO：自動操舵モード
Auto steering mode

HAND：手動操舵モード
Hand steering mode

SWITCH UNIT （PH718/Z)

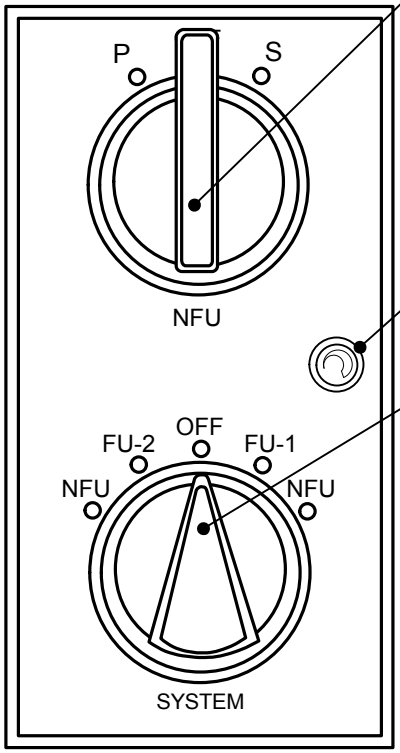

無追従操舵レバー
NON FOLLOW-UP STEERING LEVER

ディマ
DIMMER

システム切換スイッチ
SYSTEM SELECTOR SWITCH

OFF ：電源停止位置
Power supply off position

FU1：NO.1 ｼｽﾃﾑ
NO.1 System

FU2：NO.2 ｼｽﾃﾑ
NO.2 System

NFU：ﾉﾝﾌｫﾛｰｱｯﾌﾟ操舵
Non follow-up steering system

			DR.	スイッチユニット SWITCH UNIT	
			CH.		
			APP.	NO. R3D2032-10	PAGE. 4/5
			MICRO	－ －	

SIZE A4

YOKOGAWA
Yokogawa Densikiki Co.,Ltd.

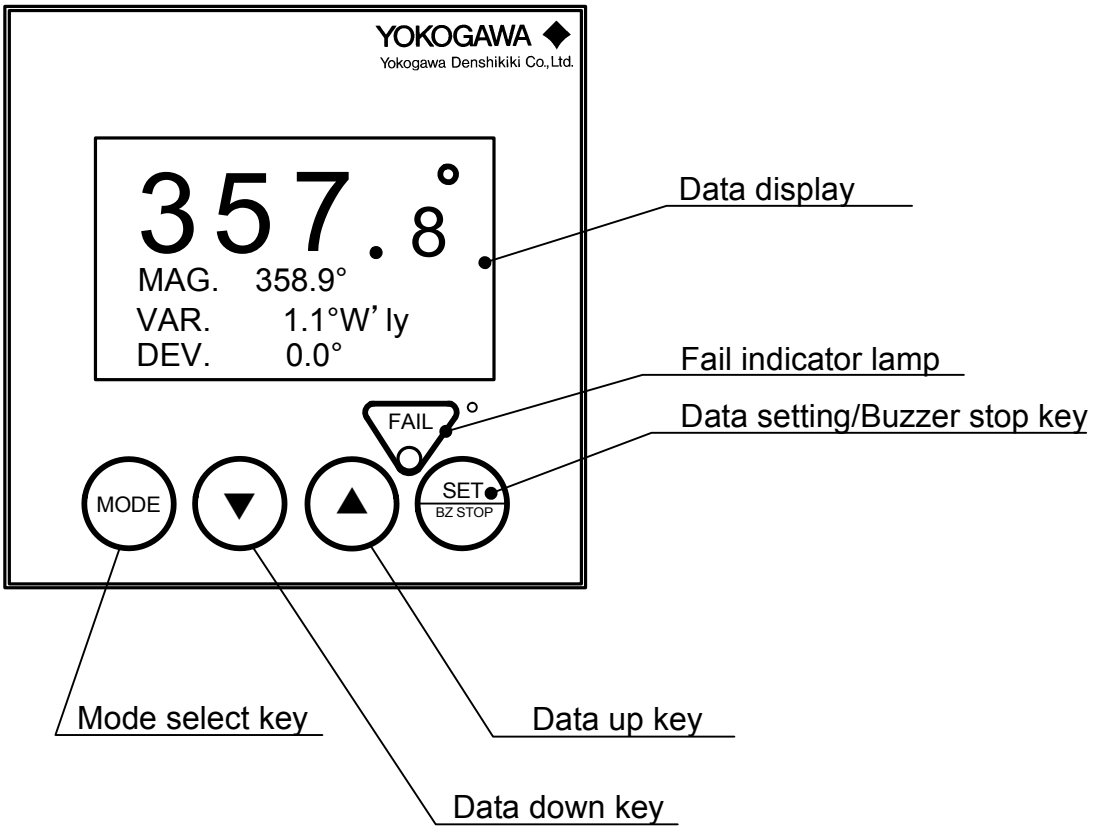

	- -	DR.		TMC 表示器 TMC DISPLAY UNIT	(MPC430)
	- -	CH.		NO. R3D2032-10	PAGE 5/5
	- -	APP.			
	- -				
MICRO					

SIZE
A4

YOKOGAWA
Yokogawa Denshikiki Co.,Ltd

MODEL	PC134
MASS	40.0 kg

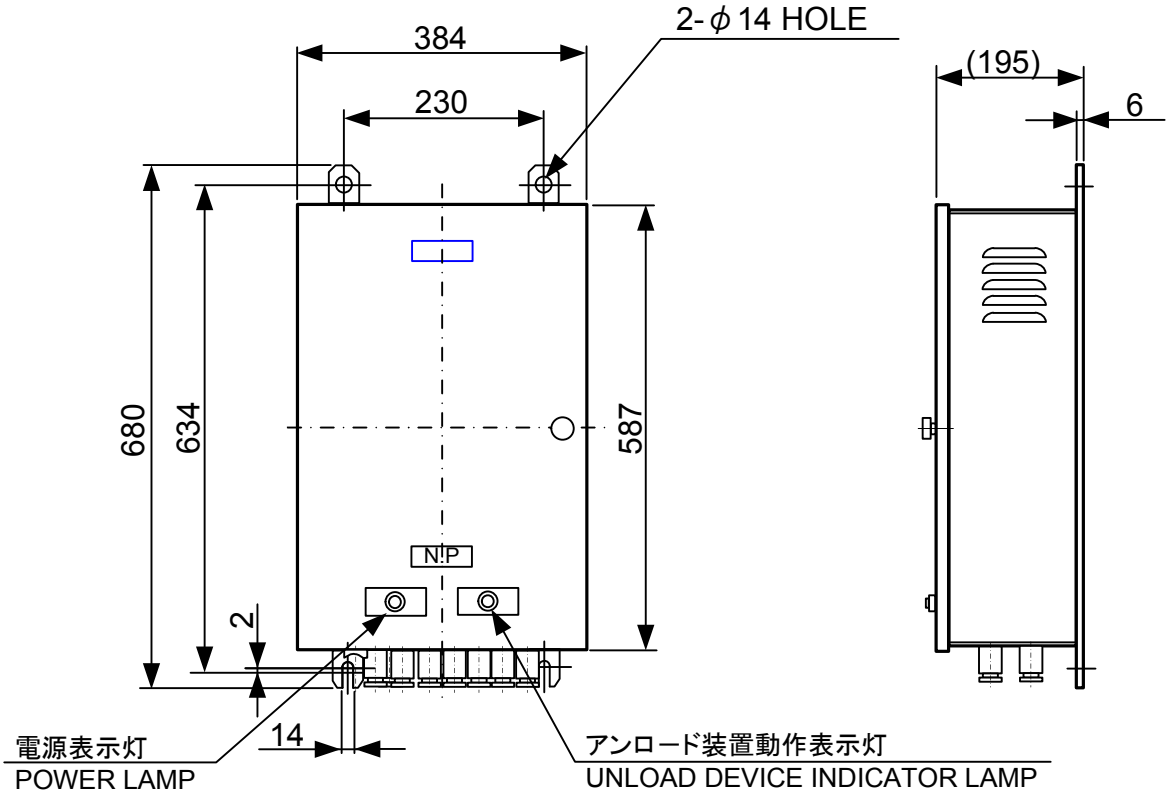

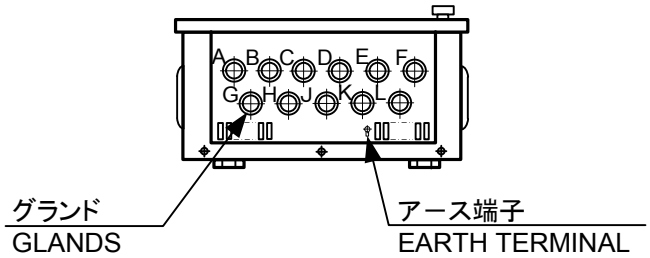

GLANDS SIZE TABLE

	A	B	C	D	E	F	G	H	J	K	L
SIZE	20f	25f	20f	20f	25f	20f	30f	20f	25f	20f	25f

20f : 15a to 20c
25f : 20b to 25c
30f : 25c to 30c

PC134 (K-type)

5	10-08-19	C.M	DR. S. Ito	2001-7-19	制 御 電 源 箱 CONTROL & POWER BOX	
			CH. C.Mibuta	2001-7-19	NO. 8G800Y228-13	PAGE 1/1
			APP. C.Mibuta	2001-7-19		

SIZU A4

YOKOGAWA
Yokogawa Denshikiki Co.,Ltd.

MODEL	PT123
MASS	11.0 kg

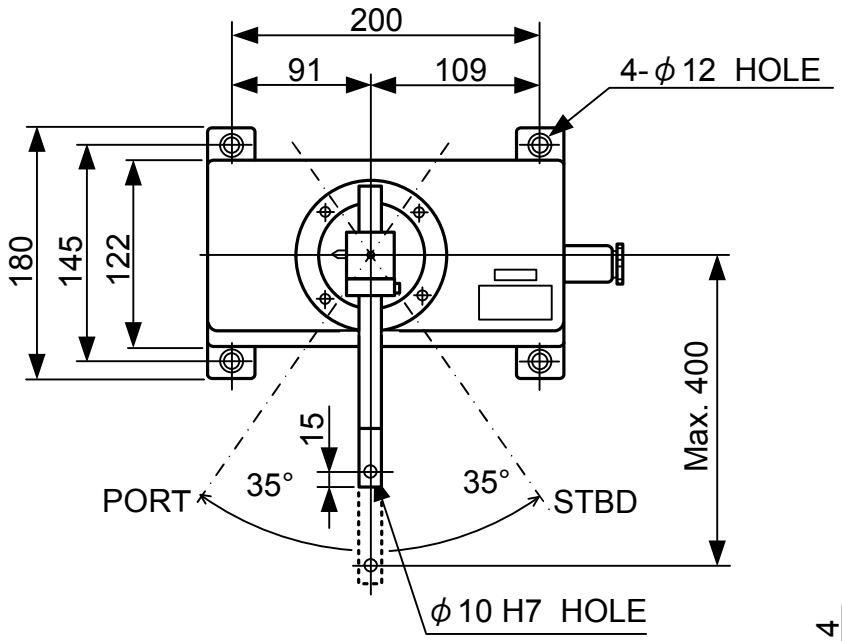

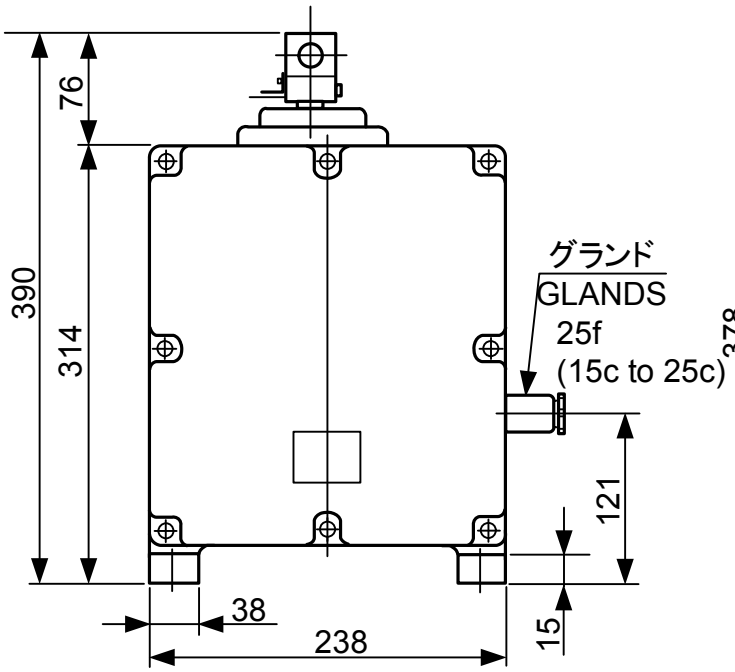

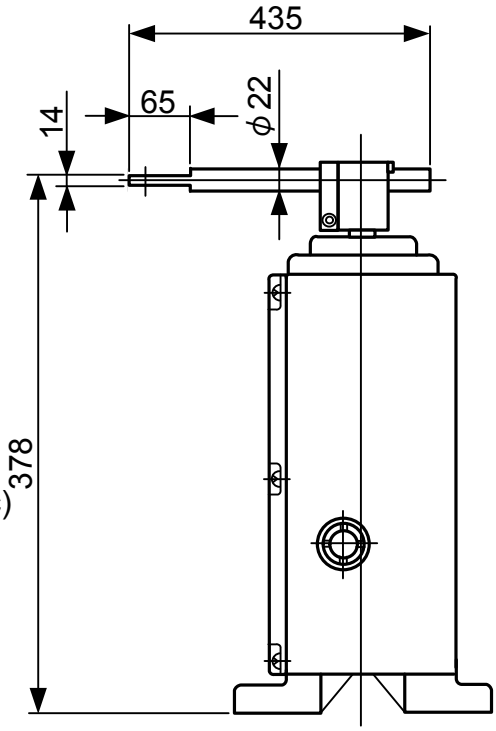

結線図
TERMINAL CONNECTIONS

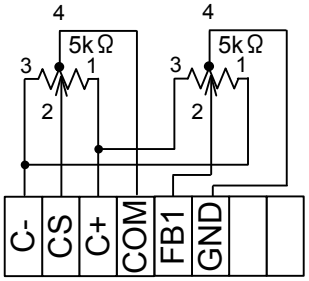

PT500-K2T/S2_FFD L=400 直角

DR.	K.Oda	2012-08-07	μ 発 信 器
CH.	C.Mibuta	2012-08-07	μ TRANSMITTER
APP.	Y.Oosaka	2012-08-07	NO. 8G800Y255-28 / PAGE 1/1

SIZU A4

YOKOGAWA
Yokogawa Denshikiki Co.,Ltd.

記事:外部ｹｰﾌﾞﾙ導入長　ﾏｽﾀｰｺﾝﾊﾟｽ底面から約1m

NOTE: Cable length for introduction: Approx 1m from master compass base.

MODEL	MKM026-1
MASS	42.0

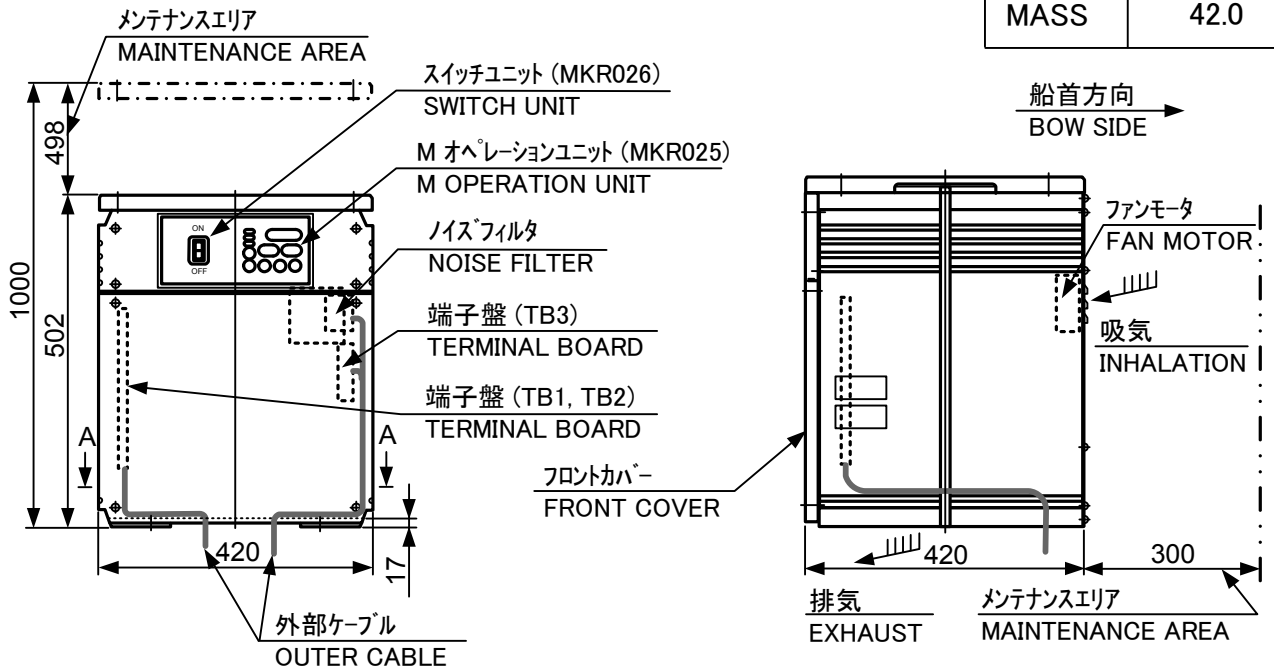

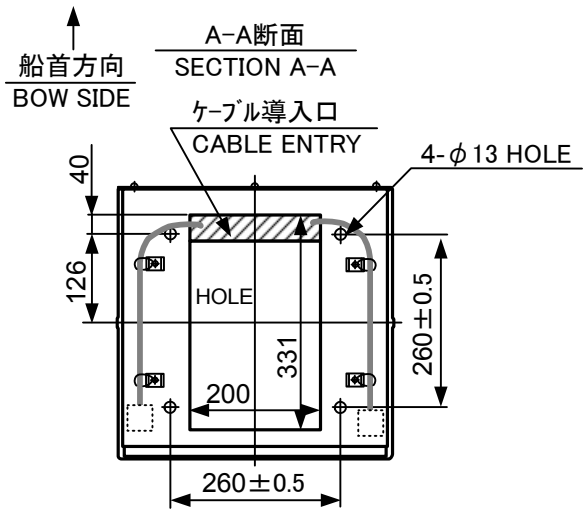

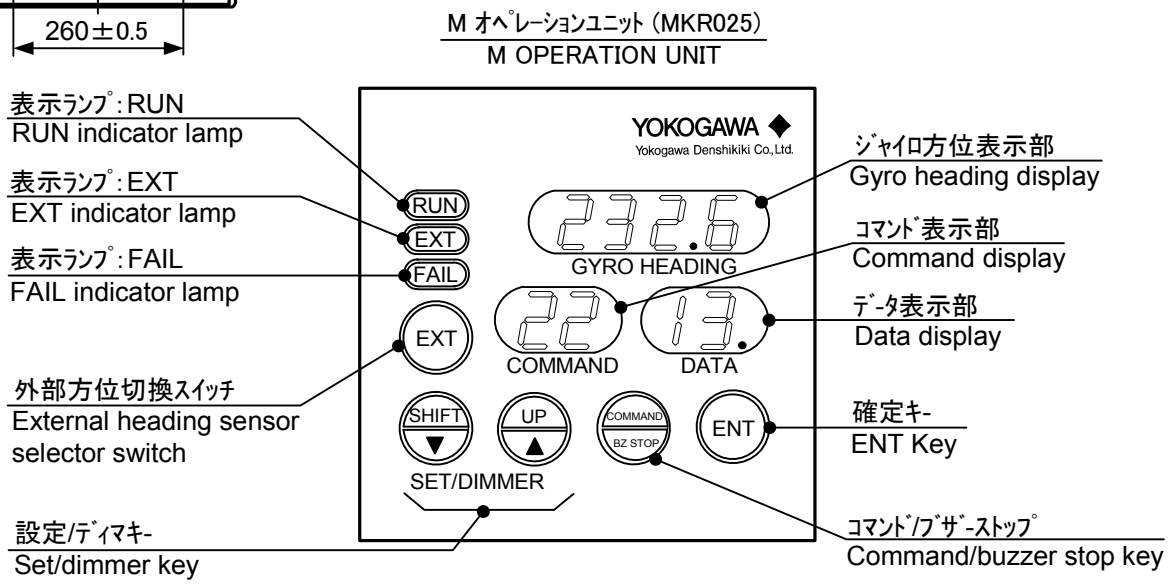

FOR CMZ900 自立形 英文

DR. S. Ito	2007-01-22	ﾏｽﾀｰｺﾝﾊﾟｽ MASTER COMPASS	
CH. C.Mibuta	2007-01-22	NO. 8G800Y118-81	PAGE 1/2
APP. C.Mibuta	2007-01-22		

SIZU A4

YOKOGAWA
Yokogawa Denshikiki Co.,Ltd.

TB2

BSP	1	ﾌﾞｻﾞｰｽﾄｯﾌﾟ入力接点 Buzzer stop contact input
BSN	2	

TB1

RDMA	1	外部方位入力 External heading input
RDMB	2	
SG	3	
P	4	ｵﾍﾟﾚｰｼｮﾝﾕﾆｯﾄ Operation unit
N	5	
RDRA	6	
RDRB	7	
SDRA	8	
SDRB	9	
SG	10	
SD1A	11	ｼﾘｱﾙ方位出力 1 Serial heading output 1
SD1B	12	
SG	13	
SD2A	14	ｼﾘｱﾙ方位出力 2 Serial heading output 2
SD2B	15	
SG	16	
SD3A	17	ｼﾘｱﾙ方位出力 3 Serial heading output 3
SD3B	18	
SG	19	
REF	20	ｽﾃｯﾊﾟ方位出力 Stepper output
SS3	21	
SS2	22	
SS1	23	
COM	24	
SG	25	
PS35V	26	ｽﾃｯﾊﾟ用外部電源入力 External power supply input for stepper
PSGND	27	
G/M	28	ｼﾞｬｲﾛ外部方位選択接点信号出力 External select contact output gyro
G/MC	29	
GF	30	ｼｽﾃﾑﾌｪｲﾙ接点信号出力 System fail contact output
GFC	31	
NV	32	電源無電圧接点信号出力 No-voltage contact output
NVC	33	
24V	34	NO.1 ﾚﾋﾟｰﾀｺﾝﾊﾟｽ出力 NO.1 Rpeater compass output
GND	35	
SD1RA	36	
SD1RB	37	
SG	38	
24V	39	NO.2 ﾚﾋﾟｰﾀｺﾝﾊﾟｽ出力 NO.2 Rpeater compass output
GND	40	
SD2RA	41	
SD2RB	42	
SG	43	
24V	44	NO.3 ﾚﾋﾟｰﾀｺﾝﾊﾟｽ出力 NO.3 Rpeater compass output
GND	45	
SD3RA	46	
SD3RB	47	
SG	48	

TB3

HDG	1	方位信号 Heading signal
COM	2	
QUD	3	象限信号 Quadlant signal
COM	4	
ROT1	5	回頭角速度信号 1 Rate of turn signal 1
COM	6	
ROT2	7	回頭角速度信号 2 Rate of turn signal 2
COM	8	
ROT3	9	回頭角速度信号 3 Rate of turn signal 3
COM	10	
U1	11	AC 電源入力 AC source input
V1	12	
U2	13	AC 電源出力 AC source output
V2	14	

Noise filter

P	1	船内電源 24V DC Ship's power supply
N	2	

端子配置図
TERMINAL ARRANGEMENT

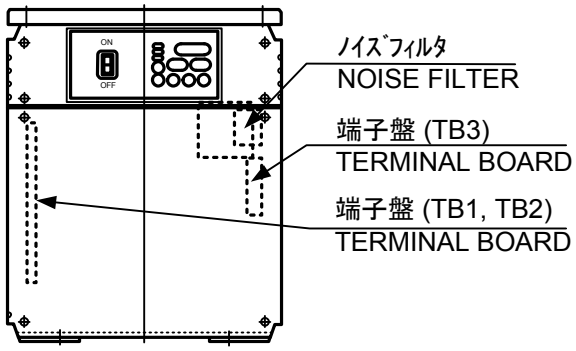

FOR CMZ900 自立形 英文

DR.		マスタ-コンパス MASTER COMPASS	
CH.		NO. 8G800Y118-81	PAGE 2/2
APP.			

SIZU A4

YOKOGAWA
Yokogawa Denshikiki Co.,Ltd.

MODEL	MKS071-W
MASS	20 kg

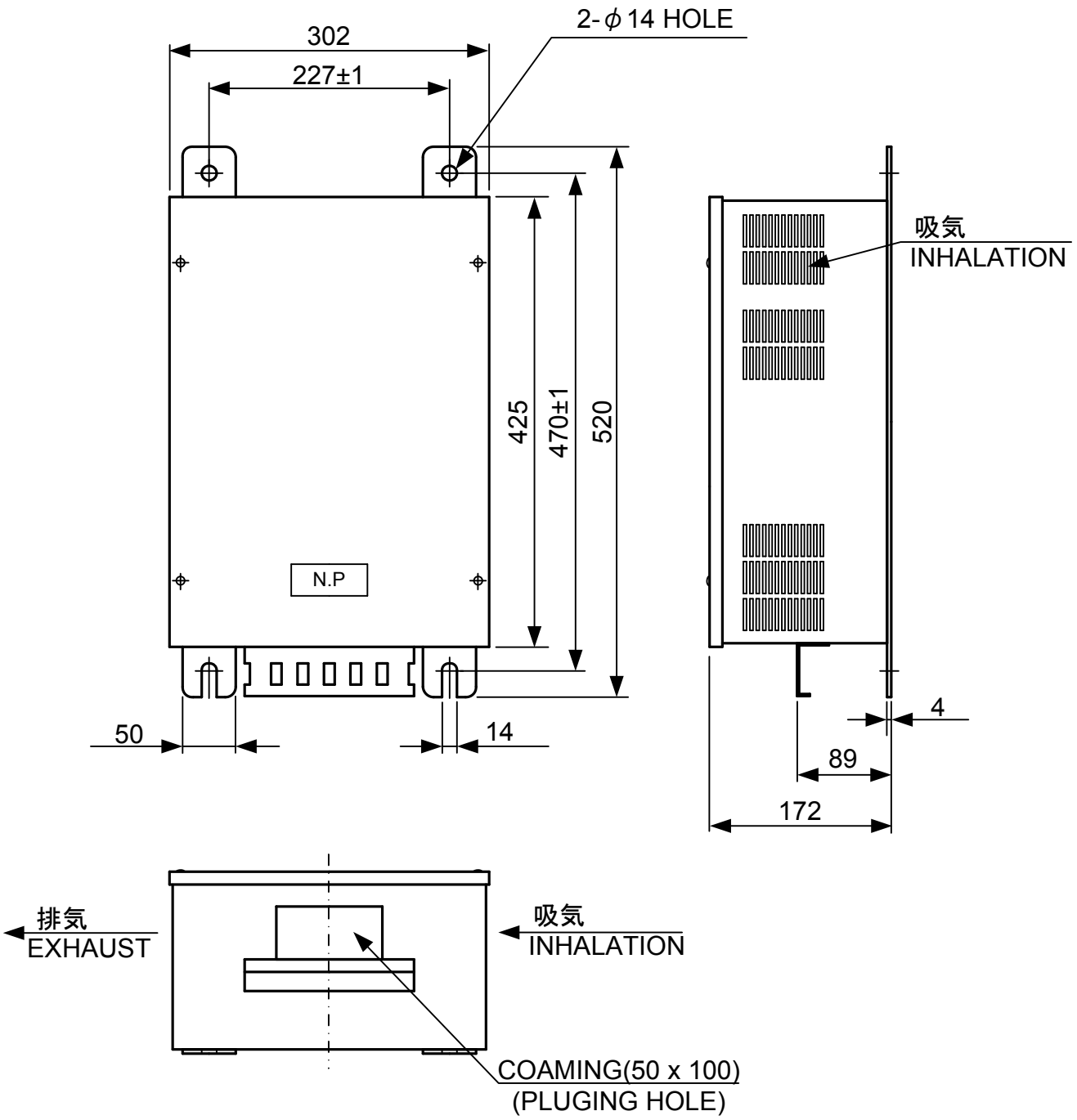

FOR CMZ900D

DR. H.Watanabe	2009-09-08	デュアルAC アダプタ DUAL AC ADAPTER	
CH T.Wakamatsu	2009-09-08	NO. 8G800Y102-29	PAGE 1/2
APP. H.Watanabe	2009-09-08		

SIZE A4

YOKOGAWA
Yokogawa Denshikiki Co.,Ltd.

TB1

1	1U	船内電源 ： AC 電源 / Ship's power supply : AC source
2	1V	
3	1P	船内電源 ： 24V DC / Ship's power supply : 24V DC
4	1N	
5	124V	DC 出力 / DC OUT
6	1GND	
7	1NV1	無電圧警報接点信号 / No-voltage alarm contact output
8	1NVC1	
9	1NV2	無電圧警報接点信号 / No-voltage alarm contact output
10	1NVC2	
11	UOUT	AC 出力 / AC OUT
12	VOUT	

NO.1 SYSTEM

TB2

1	2U	船内電源 ： AC 電源 / Ship's power supply : AC source
2	2V	
3	2P	船内電源 ： 24V DC / Ship's power supply : 24V DC
4	2N	
5	224V	DC 出力 / DC OUT
6	2GND	
7	2NV1	無電圧警報接点信号 / No-voltage alarm contact output
8	2NVC1	
9	2NV2	無電圧警報接点信号 / No-voltage alarm contact output
10	2NVC2	
11	BU24V	バックアップ DC 出力 / Back-up DC OUT
12	BUGND	

NO.2 SYSTEM

FOR CMZ900D

DR.	デュアルAC アダプタ / DUAL AC ADAPTER		
CH.			
APP.	NO. 8G800Y102-29	PAGE 2/2	

SIZE A4

YOKOGAWA
Yokogawa Denshikiki Co.,Ltd.

MODEL	MHR110A-F1
MASS	0.6 kg

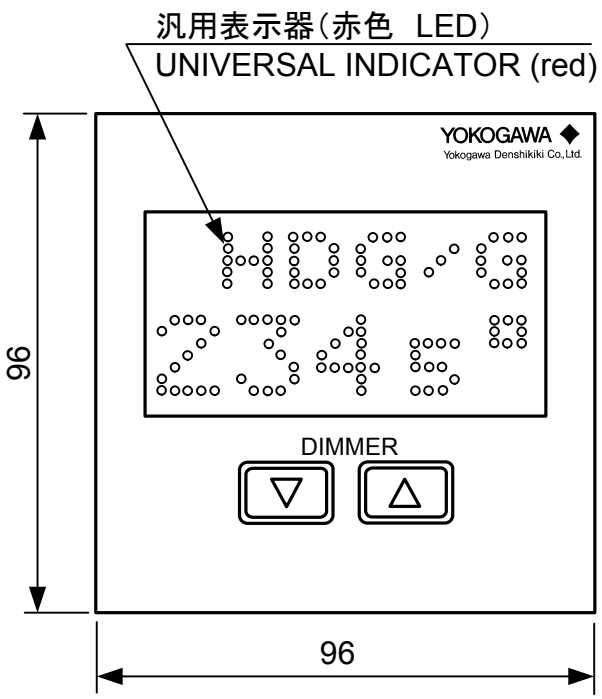

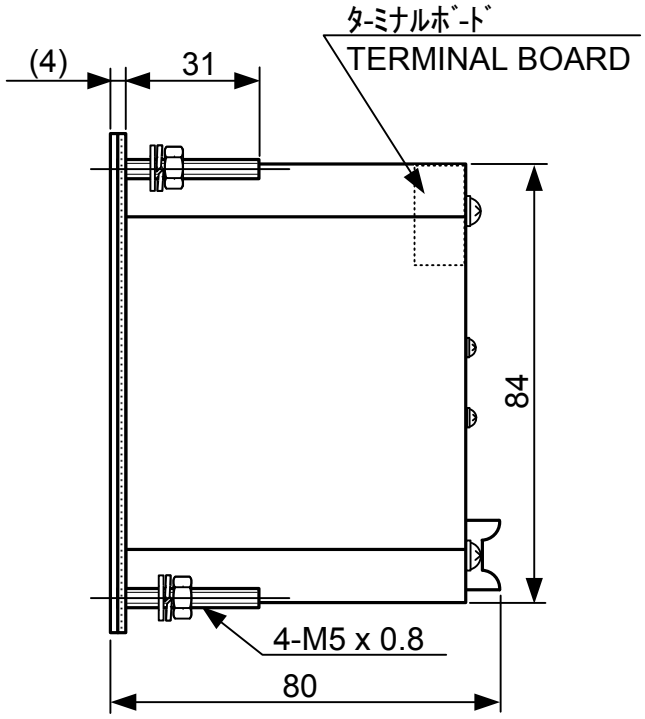

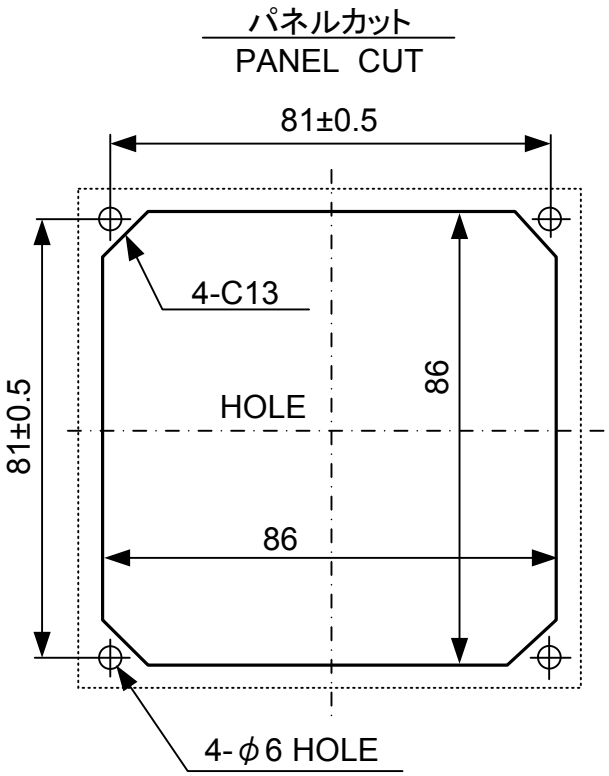

結　線　図
TERMINAL CONNECTIONS

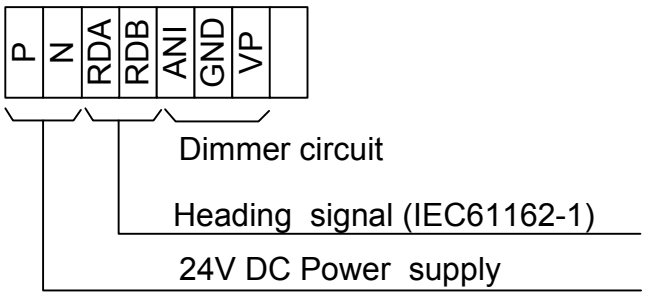

F1 ﾃﾞｨﾏ内蔵

DR.	S. Ito	2003-11-10	ユニバーサルデータ表示器(方位) UNIVERSAL DATA DISPLAY(Heading)
CH.	C.Mibuta	2003-11-10	NO. 8G800Y207-12
APP.	C.Mibuta	2003-11-10	PAGE 1/1

SIZU A4

YOKOGAWA
Yokogawa Denshikiki Co.,Ltd.

MODEL	MHR130
MASS	4.0 kg

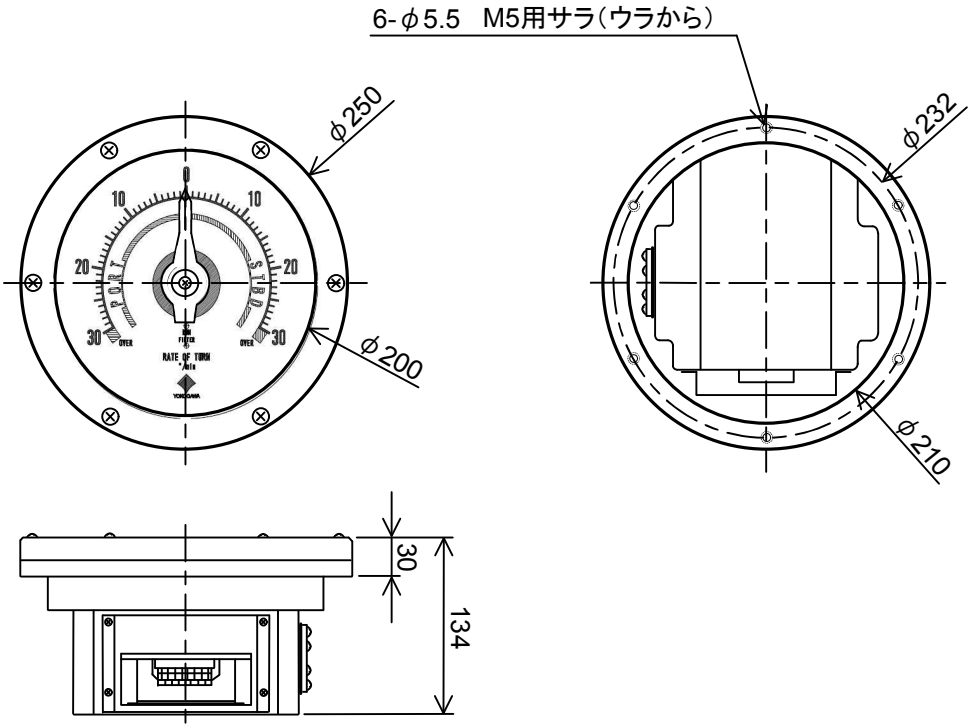

端子結線図
TERMINAL CONNECTIONS

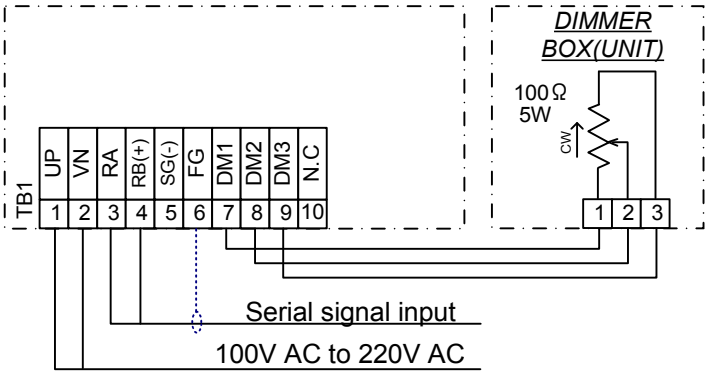

パネルカット
PANEL CUT

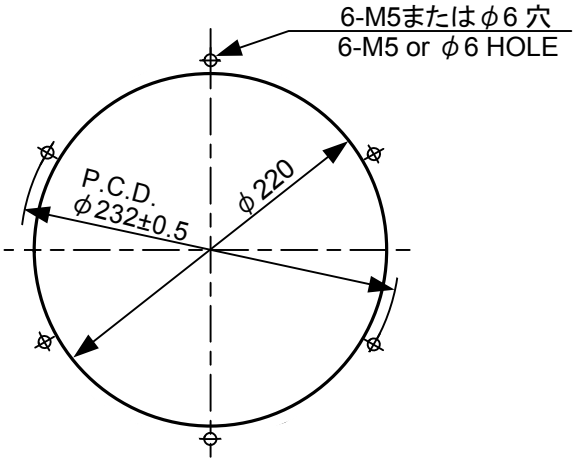

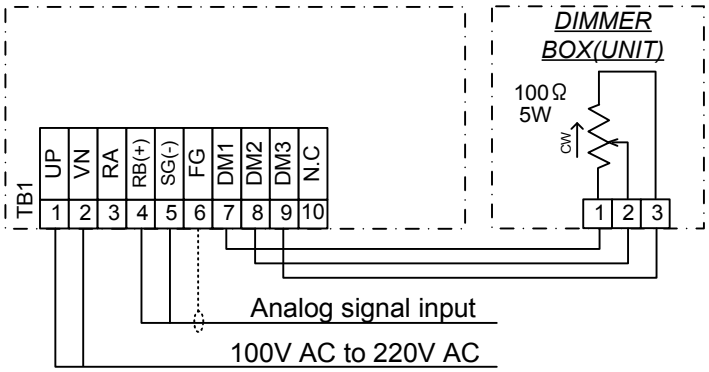

MHR130-RAT-F 30°/min

				DR. K. Oda	2011-9-14	ア ナ ロ グ 指 示 器 ANALOG INDICATOR
				CH. C.Mibuta	2011-9-14	NO. 8G800Y153-01
1	12-12-04	C.M		APP. H.Watanabe	2011-9-14	PAGE 1/2

SIZE A4

YOKOGAWA
Yokogawa Denshikiki Co.,Ltd.

COLOR SCHEME (色区分)		
GROUND (板面地色)		WHITE (白色)
LETTERING (文字)	STBD (右回頭)	GREEN (緑色)
	PORT (左回頭)	RED (赤色)
	OTHER (その他)	BLACK (黒色)
GRADUATION (目盛り)		BLACK (黒色)
BASE LINE (基線): STBD		GREEN (緑色)
BASE LINE (基線): PORT		RED (赤色)
LED		ORANGE (橙色) or GREEN (緑色)

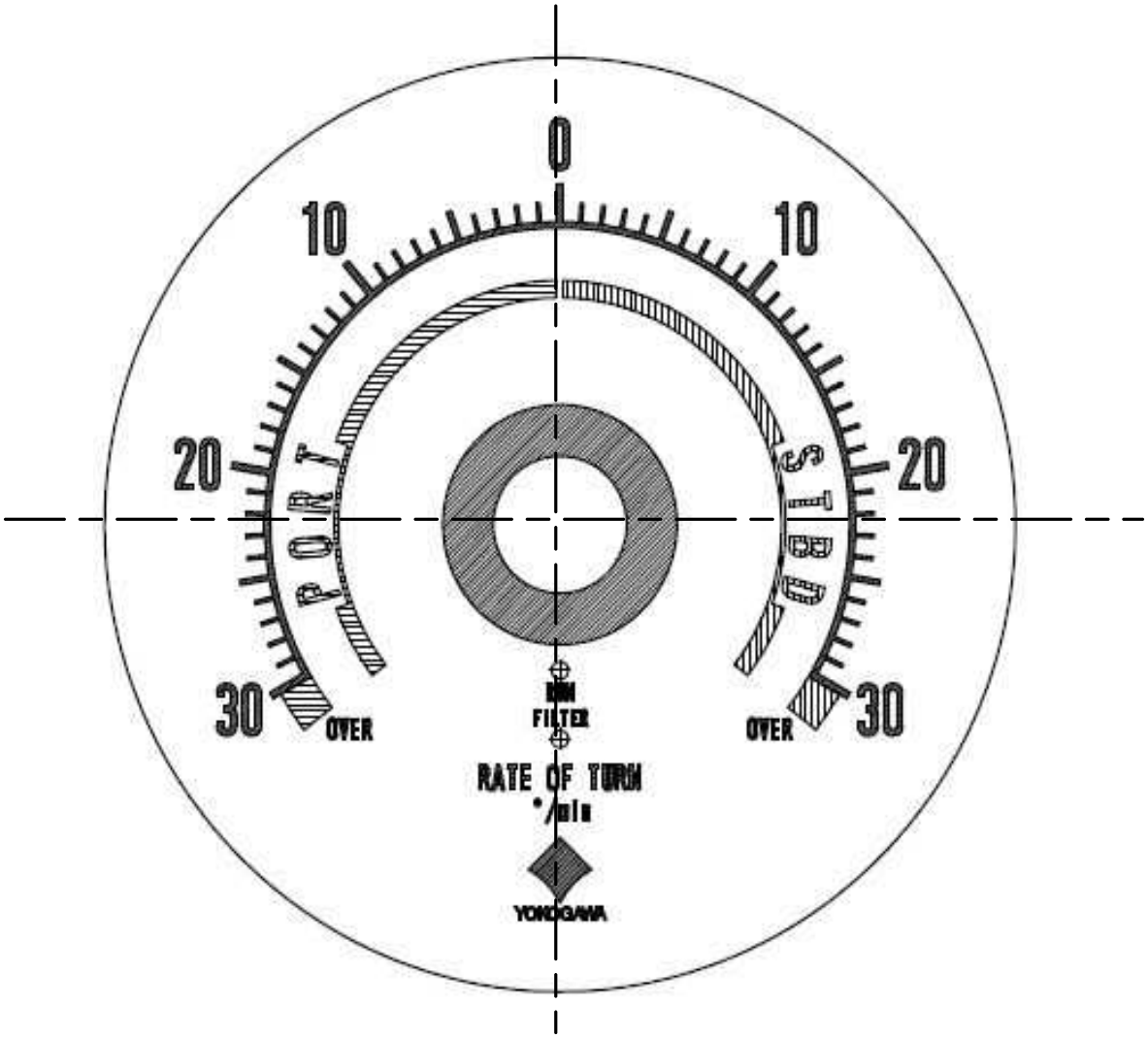

MHR130-RAT-F 30°/min

1	13-02-05	C.M	DR.	ア ナ ロ グ 指 示 器 ANALOG INDICATOR	
			CH.	NO. 8G800Y153-01	PAGE 2/2
			APP.		

SIZE A4

YOKOGAWA
Yokogawa Denshikiki Co.,Ltd.

MODEL	MRD011-F
MASS	0.3 kg

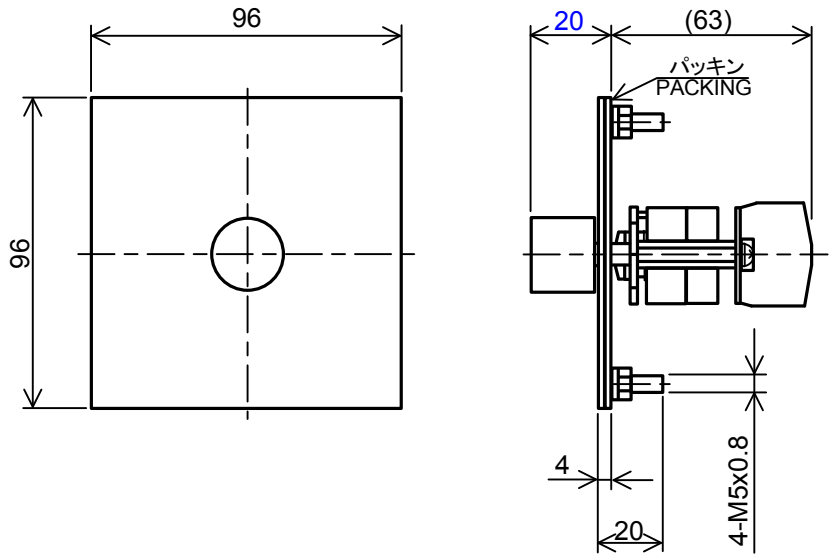

パネルカット
PANEL CUT

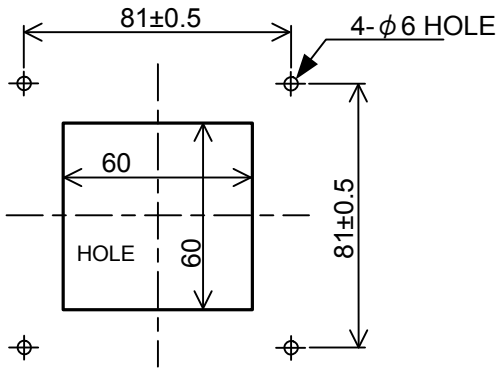

結線図
TERMINAL CONNECTIONS

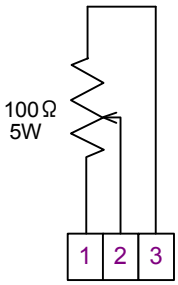

MRD011 埋込

			DR.	K. Oda	2010-2-5	ディマー ユニット DIMMER UNIT
			CH.	C.Mibuta	2010-2-5	
2	11-05-10	C.M	APP.	H.Wtanabe	2010-2-5	NO. 8G800Y303-10
1	10-05-21	H.W				PAGE 1/1

SIZU A4

YOKOGAWA
Yokogawa Denshikiki Co.,Ltd.

MODEL	MKR101A-F
MASS	6.0 kg

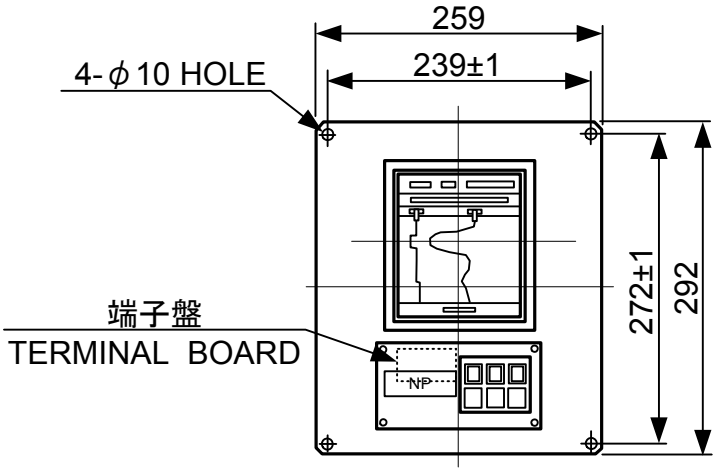

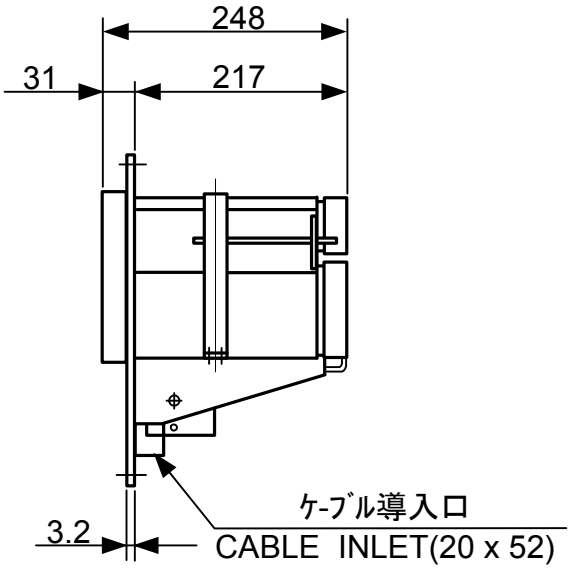

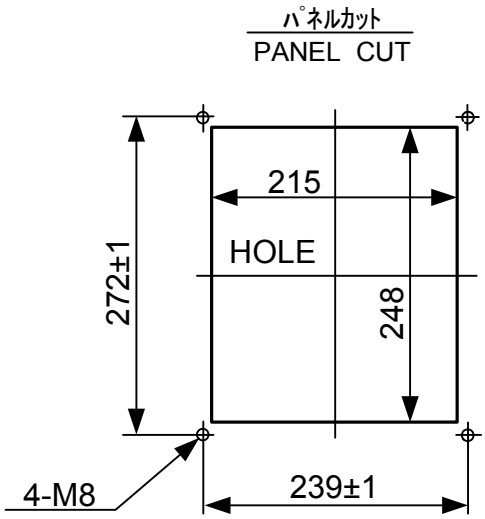

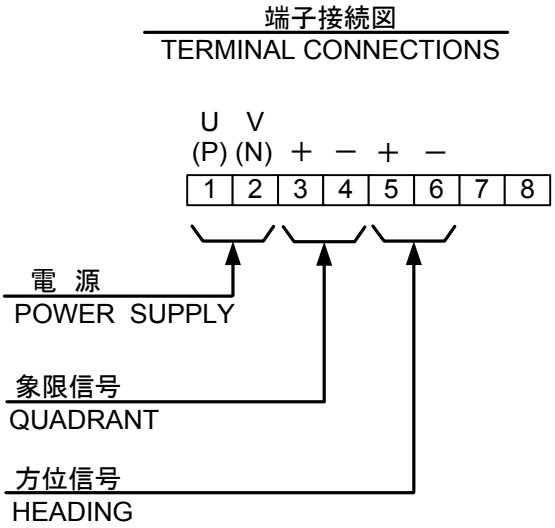

Color (Munsell NO.)	Recorder	10B3.6/0.3 (Light charcoal gray)
	Bezel	0.8Y2.5/0.4 (Lamp Black)
		2.5G7/2
		7.5BG7/2

DR.	S. Ito	2006-05-16	コースレコーダ COURSE RECORDER
CH.	C.Mibuta	2006-05-16	NO. 8G800Y205-10
APP.	C.Mibuta	2006-05-16	PAGE 1／1

SIZU A4

YOKOGAWA
Yokogawa Denshikiki Co.,Ltd.

MODEL	KX223A
MASS	21.5 kg

取 付 図
INSTALLATION DRAWING

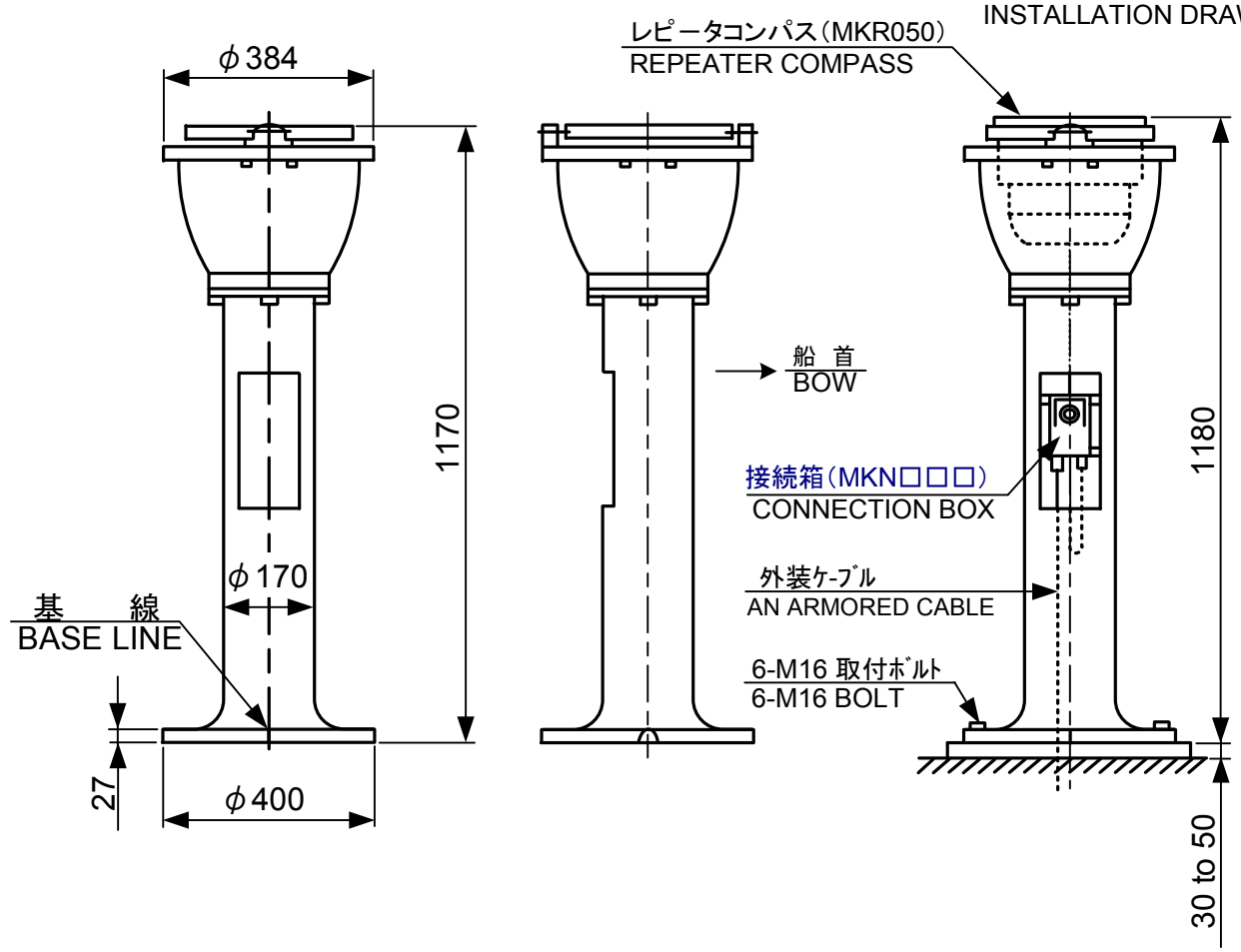

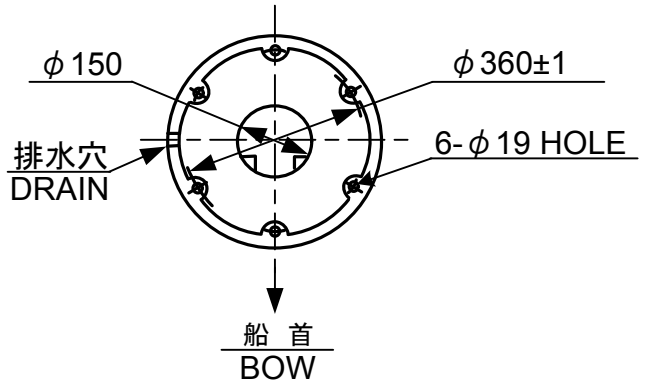

付 属 品
ATTACHMENT
帆布カバー(KX610A) ･･･1P
COVER(SAIL CLOTH)

For CMZ700/900

				DR. S. Ito	2000-03-02	水平スタンド HORIZONTAL STAND
				CH. C.Mibuta	2000-03-02	NO. 8G800Y112-15 / PAGE 1/1
SIZU A4	1	00-11-28	C.M	APP. C.Mibuta	2000-03-02	

YOKOGAWA
Yokogawa Denshikiki Co.,Ltd.

MODEL	KX201A
MASS	6.5 kg

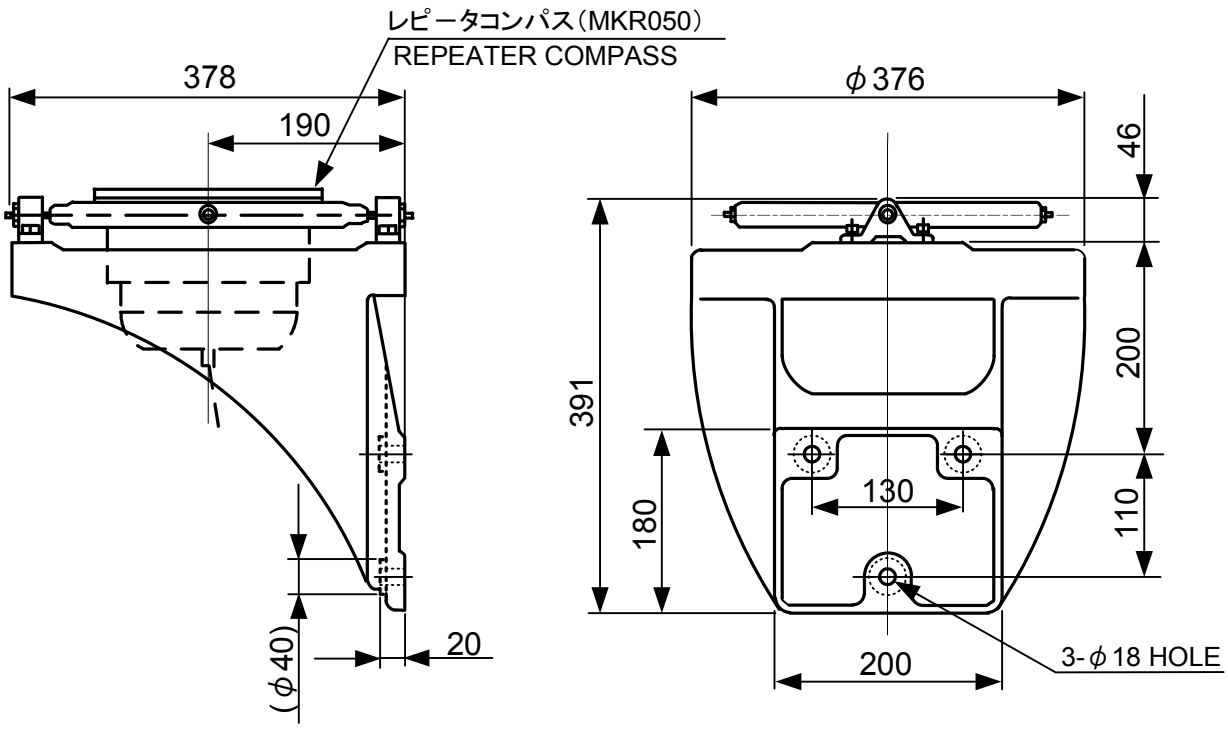

For CMZ700/900

				DR. S. Ito	2000-03-02	水平ブラケット HORIZONTAL BRACKET	
				CH. C.Mibuta	2000-03-02	NO. 8G800Y113-14	PAGE 1/1
SIZU A4	1	07-10-25	C.M	APP. C.Mibuta	2000-03-02		

YOKOGAWA
Yokogawa Denshikiki Co.,Ltd.

MODEL	KX213
MASS	4.5 kg

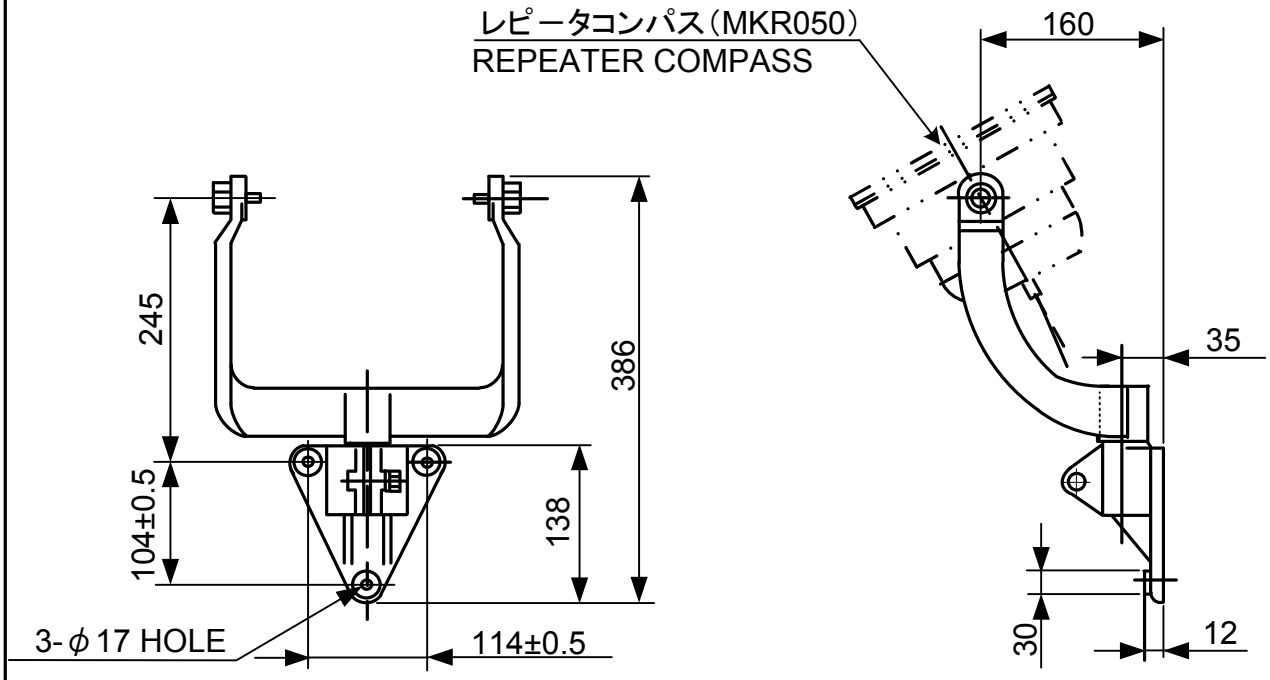

For CMZ700/900

DR.	S. Ito	2000-03-02	傾斜ブラケット TILTING BRACKET
CH.	C.Mibuta	2000-03-02	NO. 8G800Y114-12
APP.	C.Mibuta	2000-03-02	PAGE 1/1

SIZU A4

YOKOGAWA ◆
Yokogawa Denshikiki Co.,Ltd.

①	MODEL	MKR050-G
	MASS	4.8 kg

②	MODEL	MKN019-G
	MASS	1.9 kg

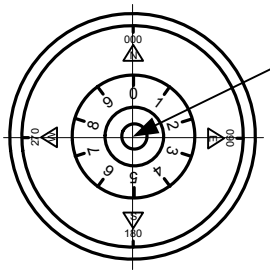

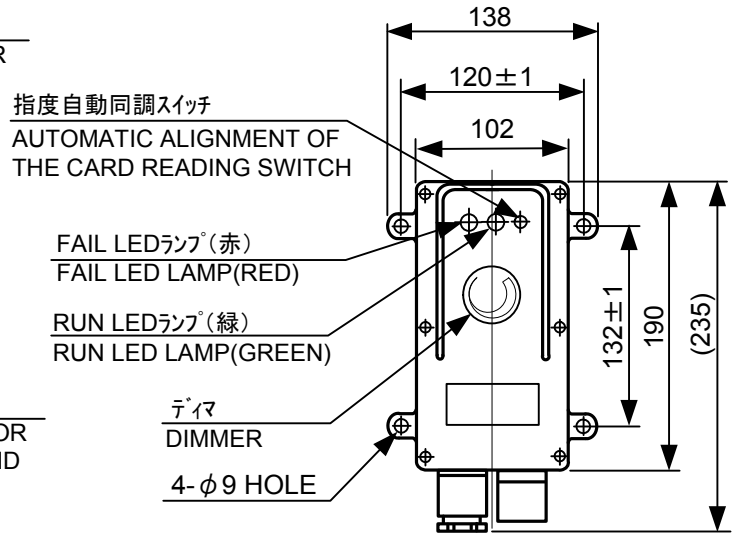

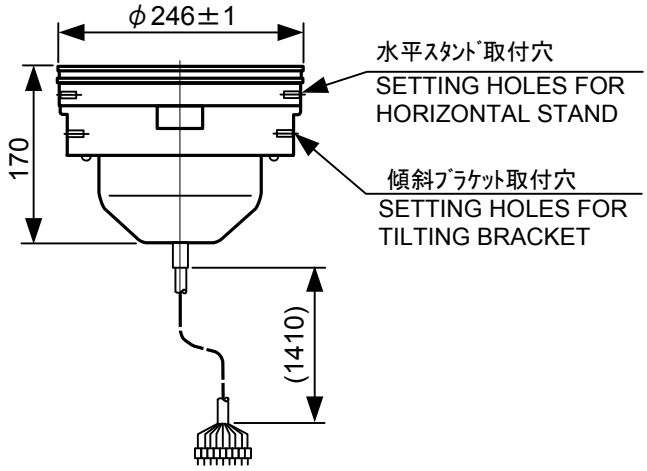

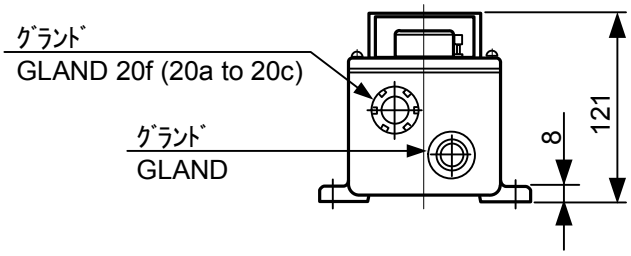

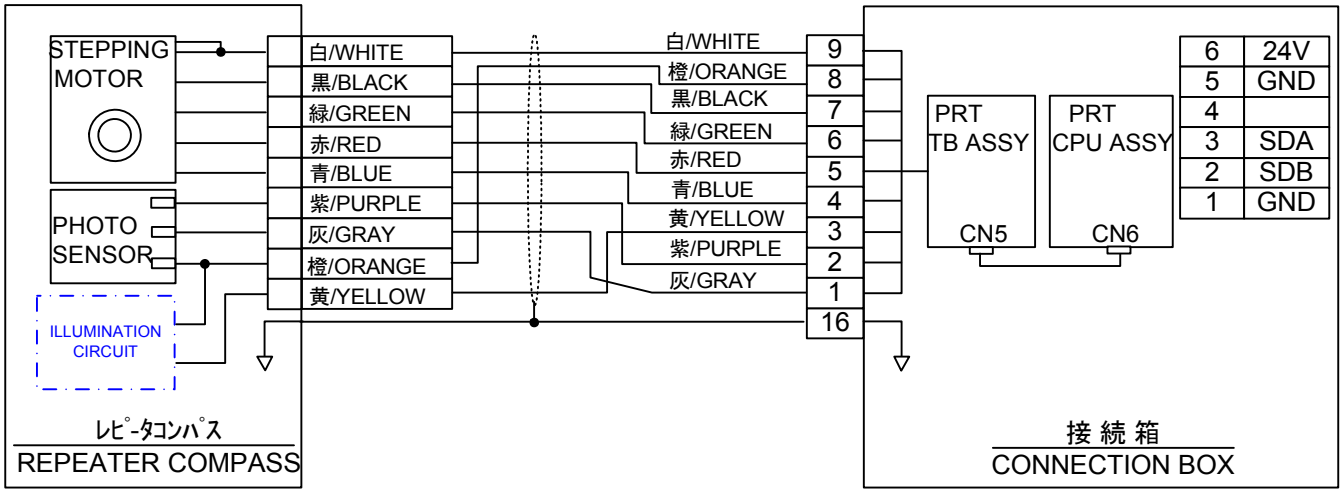

G20f

3	13-07-22	K.O	DR. S.Ito	2006-12-12	① レピータコンパス REPEATER COMPASS	② 接 続 箱 CONNECTION BOX
2	12-07-23	T.W	CH. C.Mibuta	2006-12-12	NO. 8G800Y110-26	PAGE 1/1
1	12-04-11	C.M	APP. C.Mibuta	2006-12-12		

SIZU A4

YOKOGAWA
Yokogawa Denshikiki Co.,Ltd.

MODEL	MKZ115
MASS	1.2 kg

支 持 液　1L
SUPPORTING LIQUID 1L

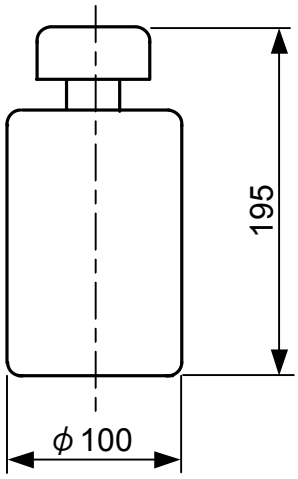

本品はマスタコンパス内へ転輪球を挿入する場合、第1回目の本艤装常用部品である。

The supporting liquid and in bottle are not spare but prepared for the use when the Gyro sphere for the first time.

MODEL	MKT007
MASS	2.1 kg

転輪球
GYRO SPHERE

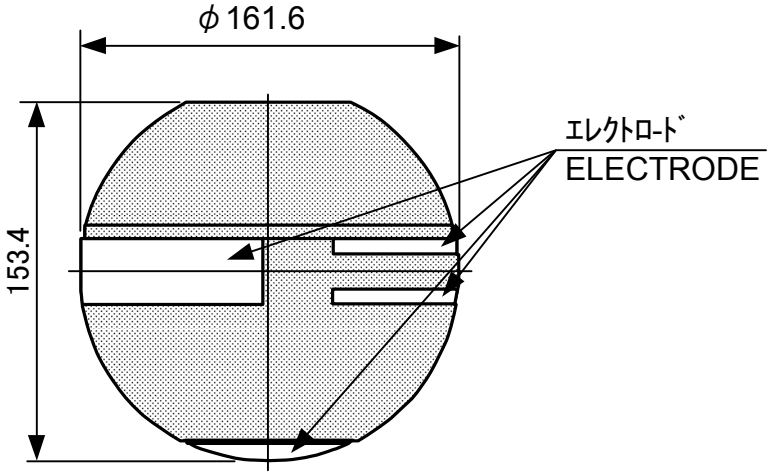

FOR CMZ900B

DR.	S. Ito	2007-01-23	艤装用キット、転輪球 FITTING KIT, GYRO SPHERE
CH.	C.Mibuta	2007-01-23	NO. 8G800Y150-17
APP.	C.Mibuta	2007-01-23	PAGE 1／1

SIZU A4

YOKOGAWA
Yokogawa Denshikiki Co.,Ltd.

MODEL	MKX617
MASS	2.0 kg

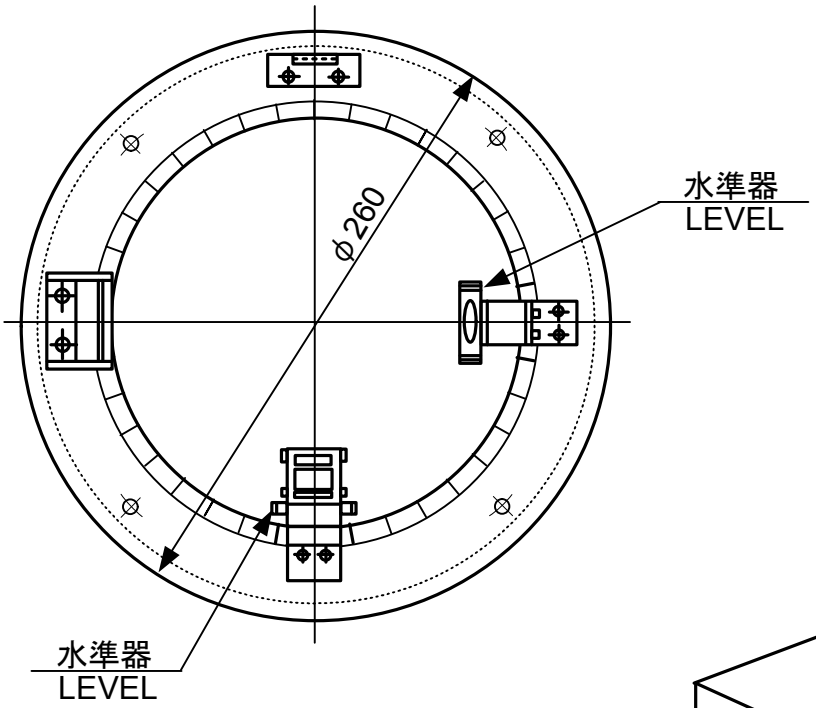

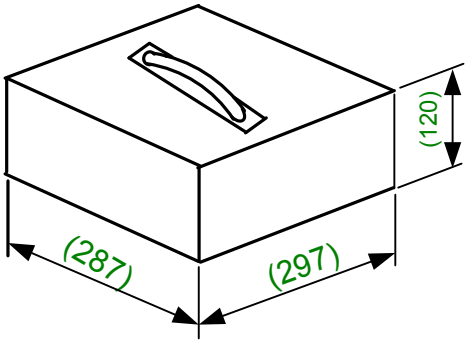

格 納 箱
CONTAINER

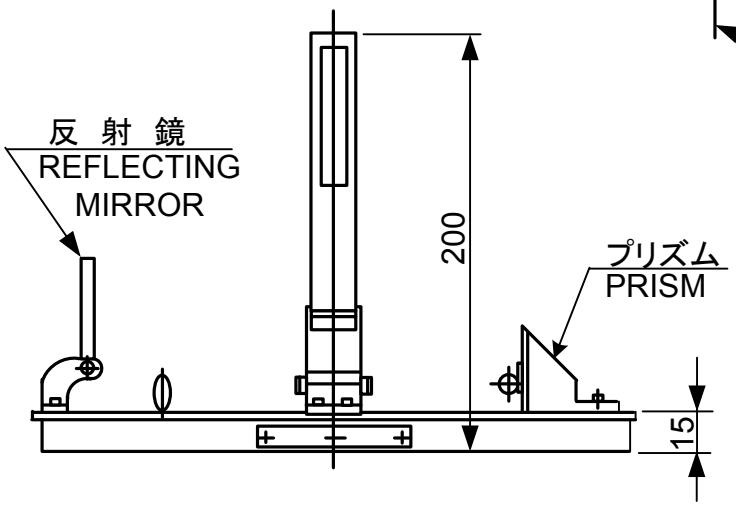

付 属 品
ATTACHMENT

シャドウピン ・・・3P
SHADOW PIN
V8114QA

L=145

FOR CMZ700

4		13-03-07	Y.O	DR. S. Ito	2000-02-02	アジマスサークル AZIMUTH CIRCLE	
3		08-03-16	H.W	CH. C.Mibuta	2000-02-02	NO. 8G800Y115-09	PAGE 1/1
2		05-07-20	S. I	APP. C.Mibuta	2000-02-02		
1		00-11-9	S. I				

SIZU A4

YOKOGAWA
Yokogawa Denshikiki Co.,Ltd.

MODEL	KX605
MASS	0.3 kg

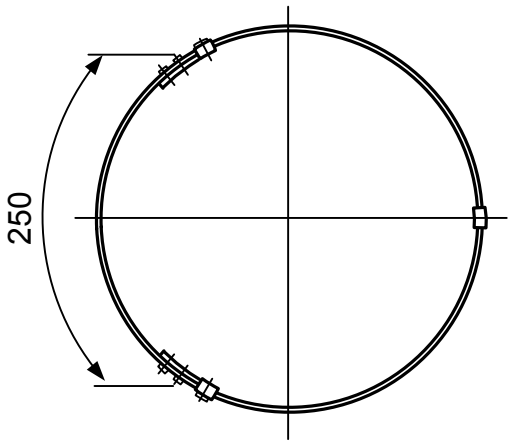

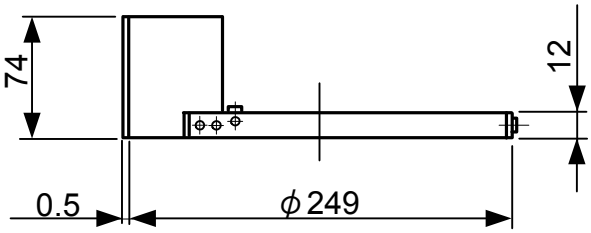

				DR. S. Ito	2000-06-21	遮　光　環 SHADING CIRCLE	
				CH. C.Mibuta	2000-06-21	NO. 8G800Y122-02	PAGE 1/1
SIZU A4	3	00-6-21	C.M	APP. C.Mibuta	2000-06-21		

YOKOGAWA
Yokogawa Denshikiki Co.,Ltd.

MODEL	KX607
MASS	0.5 kg

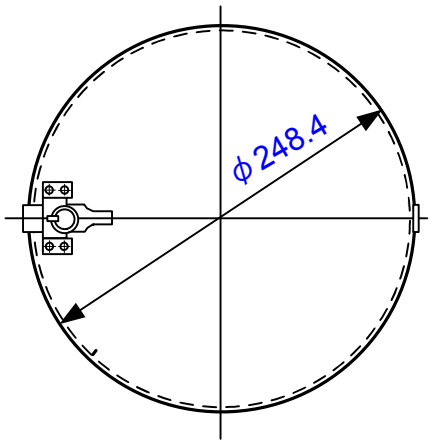

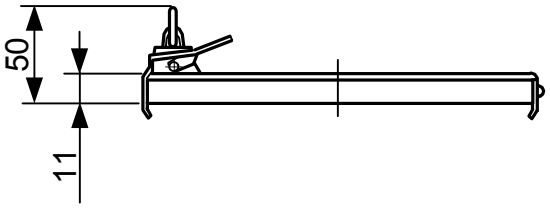

				DR.	S. Ito	2000-06-21	レピータカバー REPEATER COVER
				CH.	C.Mibuta	2000-06-21	NO. 8G800Y121-02 / PAGE 1/1
3		04-04-07	C.M	APP.	C.Mibuta	2000-06-21	
2		00-6-21	C.M				

SIZU A4

YOKOGAWA
Yokogawa Denshikiki Co.,Ltd.

MODEL	————
MASS	6.6 kg

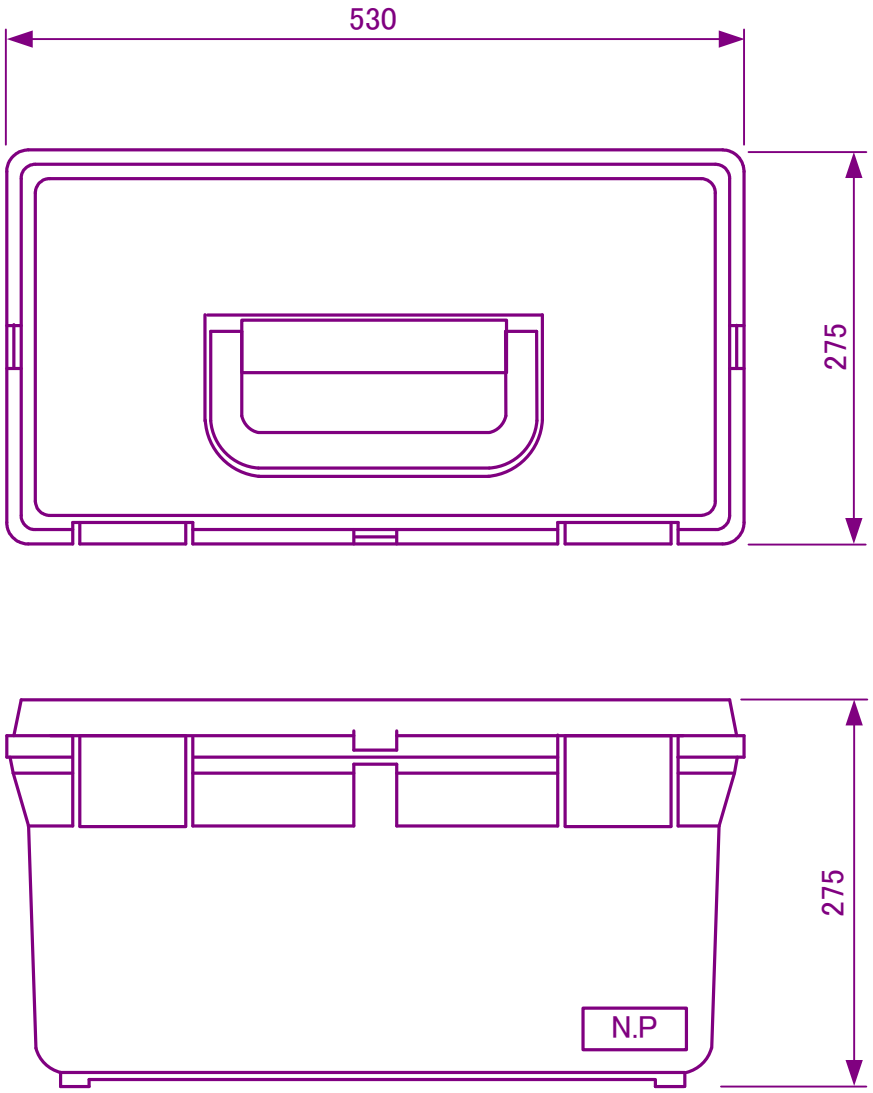

HARD CASE 600

MATERIAL : Polypropylene

			DR.	S. Ito	2004-07-12	予　備　品　箱 SPARE PARTS BOX
3	13-02-07	T.W	CH.	C.Mibuta	2004-07-12	NO. 8G800Y298-17
2	12-12-07	Y.T	APP.	C.Mibuta	2004-07-12	PAGE 1/1
1	10-10-20	T.W				

SIZU A4

YOKOGAWA
Yokogawa Denshikiki Co.,Ltd.

SHIP NO.	TOOLS & SPARE PARTS LIST FOR	USE	SETS PER VESSEL
	AUTOPILOT		

ITEM NO.	NAME OF PART	OUTLINE	QUANTITY WORKING PER SET	QUANTITY WORKING PER VESS	QUANTITY SPARE	REMARKS
101						
102						
103	CELLO-LITE FUSE ELEMENT ﾋｭｰｽﾞｴﾚﾒﾝﾄ	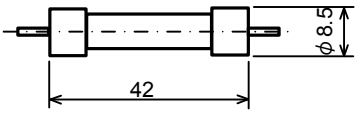	1	2	4	CONTROL & POWER BOX 500V AC 10A 1G151Z011-10
104	CELLO-LITE FUSE ELEMENT ﾋｭｰｽﾞｴﾚﾒﾝﾄ	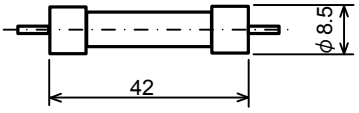	3	6	12	CONTROL & POWER BOX 500V AC 5A 1G151Z011-05
105	CELLO-LITE FUSE CASE ﾋｭｰｽﾞｹｰｽ	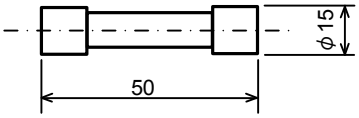	4	8	1	CONTROL & POWER BOX 1G151Z012-01
106	NEON LAMP ﾈｵﾝﾗﾝﾌﾟ	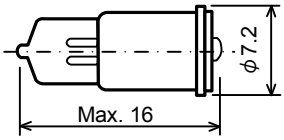	2	4	1	CONTROL & POWER BOX AHX655-H M8007VP
107	RELAY ﾘﾚｰ	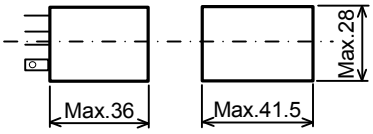	3	6	2	CONTROL & POWER BOX 100/110V AC(LY4) M8021MR
108	RELAY ﾘﾚｰ	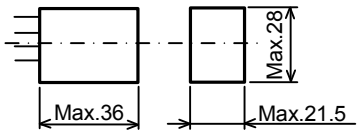	2	4	1	CONTROL & POWER BOX 100V AC(MY4Z-CBG) 1J163B071-10
109	RELAY ﾘﾚｰ	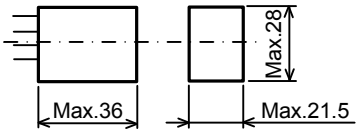	5	10	1	CONTROL & POWER BOX 100/110V AC(LY2) M8015MR
110						

MFR'S NAME	Yokogawa Denshikiki Co., Ltd.	DWG. NO.	8G820Z723-45 1/1

PT500-K2T(NEW PCB) 380/440V rev.1 2012.04.13

SHIP NO.	TOOLS & SPARE PARTS LIST FOR	USE	SETS PER VESSEL
	AUTOPILOT (ADDITIONAL)		

ITEM NO.	NAME OF PART	OUTLINE	QUANTITY WORKING PER SET	QUANTITY WORKING PER VESS	QUANTITY SPARE	REMARKS
111	RELAY リレー	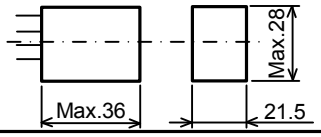	6	6	3	TERMINAL UNIT 1G163B004-65 100V AC(MY4Z)
112	RELAY リレー	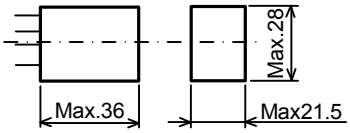	3	3	2	TERMINAL UNIT V8811CN 24V DC (MY4Z)
113						
114						
115						
116						
117						
118						
119						
120						

MFR'S NAME	Yokogawa Denshikiki Co., Ltd.	DWG. NO.	R3D2032-20	1/1

PT500_ADD rev.1 2013-11-26

SHIP NO.	TOOLS & SPARE PARTS LIST FOR	USE	SETS PER VESSEL
	CMZ900D GYROCOMPASS		

ITEM NO.	NAME OF PART	OUTLINE	QUANTITY WORKING PER SET	QUANTITY WORKING PER VESS	QUANTITY SPARE	REMARKS
200	SPHERE SUPPORT & CONTAINER BASE ｺﾝﾃﾅ台/転輪球受台	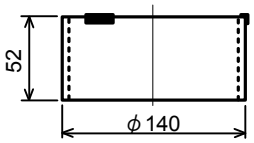	—	—	2	V8123ME
201	INJECTOR 注 射 器	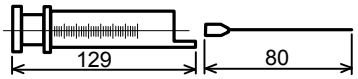	—	—	1	20mL 1G124G023-01
202	METER CUP 計 量 器	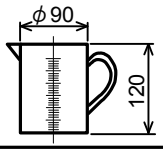	—	—	1	V8114KQ
203	FUNNEL ロート	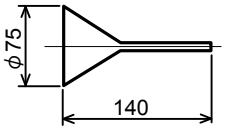	—	—	1	V8114MK
204	SUPPORTING LIQUID 支 持 液	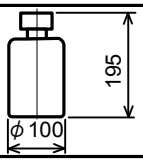	—	—	1L x2	V8114ML 安息香酸/Benzoic acid 蒸留水/Distilled water ｸﾞﾘｾﾘﾝ/Glycerine 混合液 Mixtured
205	FILTER ﾌｨﾙﾀ	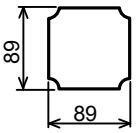	—	—	20	V8817BG (109-1001M20)
206	CONNECTION DRIVER 結線工具ﾄﾞﾗｲﾊﾞ	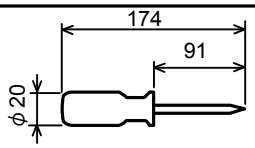	—	—	1	5T124G029-01 (210-120J)
207						
208						
209						

MFR'S NAME	Yokogawa Denshikiki Co., Ltd.	DWG. NO.	8G803N701-32	1/2

CMZ900D(MKZ512-6 back-up use) rev.0 2007.01.26

SHIP NO.	TOOLS & SPARE PARTS LIST FOR	USE	SETS PER VESSEL
	CMZ900D GYROCOMPASS		

ITEM NO.	NAME OF PART	OUTLINE	QUANTITY WORKING PER SET	QUANTITY WORKING PER VESS	QUANTITY SPARE	REMARKS
210						
211	FUSE ﾋｭｰｽﾞ	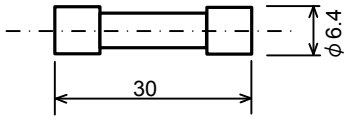	8	8	16	For control unit & AC adapter 32V DC 15A 5T151A040-02
212	FUSE ﾋｭｰｽﾞ	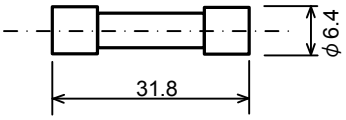	4	4	8	For AC adapter 250V AC 10A A1034EF
213	FUSE ﾋｭｰｽﾞ	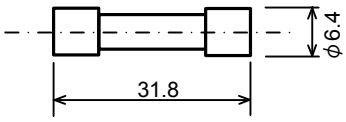	6	6	12	For control unit & AC adapter 250V AC 2A A1031EF
214						
215						
216						
217						
218						
219						

MFR'S NAME	Yokogawa Denshikiki Co., Ltd.	DWG. NO.	8G803N701-32	2/2

CMZ900D(MKZ512-6 back-up use) rev.1 2012.04.11

SHIP NO.	TOOLS & SPARE PARTS LIST FOR	USE	SETS PER VESSEL
	MKR101A COURSE RECORDER コースレコーダ		

ITEM NO.	NAME OF PART	OUTLINE	QUANTITY WORKING PER SET	QUANTITY WORKING PER VESS	QUANTITY SPARE	REMARKS
1	2-PEN 2-ﾍﾟﾝ	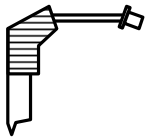	EACH 1	EACH 1	EACH 1	B9902AM (red) B9902AN (green)
2	PLOTTER PEN ﾌﾟﾛｯﾀﾍﾟﾝ		1	1	1	B9902AR (purple)
3	CHART 記録紙	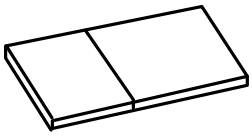	1	1	5	V8105AA
4						
5						
6						
7						
8						
9						
10						

MFR'S NAME	Yokogawa Denshikiki Co., Ltd.	DWG. NO.	8G800D711-43 1／1

rev. 2006.05.30